Electric Service Installation Guide



Adams Electric Cooperative, Inc.

A Touchstone Energy® Cooperative

888/232-6732 • *adamsec.coop*

Revised: October 2026

ADAMS ELECTRIC COOPERATIVE
ELECTRIC SERVICE INSTALATION GUIDE

INTRODUCTION

Adams Electric Cooperative, Inc. ("Cooperative") provides this guide for all who are performing or planning electrical installations in the Cooperative service area.

This guide does not supersede the National Electrical Code or any applicable federal, state, municipal, or county laws or ordinances that are presently in effect, or which may arise in the future.

The requirements of this guide are not complete specifications. They merely cover electrical information and data of mutual concern to the Cooperative and to those performing the electrical work. This information and data helps to facilitate a proper, reliable, and safe supply of electric service.

Compliance with this guide does not absolve the member or the installer from the obligations of installing and maintaining wiring and equipment in a safe condition. Further, the Cooperative does not accept in any way the responsibility for installation or condition of the member's wiring and equipment. The National Electrical Code requirements must be met, and an inspection card from an authorized inspection agency that is both approved by the Cooperative and licensed in Pennsylvania, must be presented to and accepted by the Cooperative before service will be connected.

The Cooperative may, in its sole judgment and discretion, also require an electric service agreement with terms and conditions as to be specified by and acceptable to the Cooperative. Further, all who will become members of the Cooperative must provide a membership application and agreement, must comply with and be bound by the By-laws of the Cooperative and, as defined therein, all other Governing Documents of the Cooperative, and must comply with all other applicable policies of the Cooperative.

The information in this guide will be revised and/or updated from time to time. To help you keep abreast of these changes, such superseding revisions and/or updates will be posted on the Cooperative's web site, http://www.adamsec.coop.

Our goal is to provide adequate, safe and reliable electric service to all of our member-owners. Should you or your installer need any assistance, further explanation, or have questions concerning this guide or compliance with any of the requirements of the Cooperative, please contact an office of the Cooperative and we will be pleased to coordinate with you.

TABLE OF CONTENTS

I. General Information/Application for Service 3
II. Electrical Inspection 3
III. Right to Refuse Service 4
IV. Types of Service Available 4
V. Meter Locations 5
VI. Construction Service 5
VII. Temporary Service 5
VIII. Pole Mounted Service 5
IX. Three Phase Service 6
X. Seasonal Service 6
XI. Metering 7
A. Single Phase 7
B. Three Phase 7
C. Power Factor 8
XII. Underground 9
A. Single Phase 9
B. Three Phase 9
C. Subdivisions 10
D. Padmounted Clearances 11
F. Natural Gas and Propane Clearance 11
XIII. Motors 11
XIV. Pole Attachments 12
XV. Standby Generation Equipment 12
XVI. Parallel Generation 12
XVII. Mobile Home Service 12
XVIII. Major Load Additions. 12
A. Water Heaters, Plug-In Vehicles, etc 12
B. Heat Pump/Central Air Conditioning 13
C. Welders 13
XIX. Short Circuit Current 13
XX. Multiple Occupancy Buildings 13
XXI. Multiple Services on One Property 13
XXII. Interruptible Loads 13
XXIII. Lighting 14
Approved Meter Base Information ..... Appendix A
Typical Installation Drawings ..... Appendix B

I. GENERAL INFORMATION

APPLICATION FOR SERVICE

A. **New Construction** - The Cooperative's Member Service number (1-800-726-2324) must be contacted before any wiring on the premises is performed so that main panels can be located in a way as to be compatible with the meter location. It is recommended that the Cooperative be notified a minimum of 60 days before service will be required. In cases where three-phase service is required, it is recommended that the Cooperative be notified 90 days or more in advance.

Within a few days of the receipt of a request for service, a representative of the Cooperative will arrange to meet with the new member and/or his contractor at the construction site. At that meeting many of the details for service can be worked out including the selection of a meter location. The cooperative is responsible to determine the meter location, which is typically a location nearest to the Cooperative's facilities. Alternative meter locations can be accepted however additional charges may be incurred by the member. In order to receive electric service, it will be necessary for the new member to complete a membership application and pay the current membership fee. In addition, the service connection fee will be assessed in cases where a new service drop is required. Additional charges may be levied depending on the length of the line extension required to serve the new member. The new member will also be required to provide the Cooperative with an easement to cover the new facilities that will be installed on the member's property.

The Cooperative is complying with Act 45 of 1999 as adopted by the Commonwealth of Pennsylvania. Act 45 of 1999 dictates that all new construction complies with minimum construction and insulation standards. A member must provide a certificate of compliance with Act 45 of 1999 and its subsequent amendments in order to establish electric service.

B. **Alterations to Service or Additions to Electrical Load** - If alterations to the service entrance are planned, please notify the Cooperative at 1-800-726-2324 prior to the start of the work. Most alterations will require an electrical inspection. Where alterations or repairs to the electric service require the meter to be pulled, the electrician doing the work shall contact the cooperative to pull the meter. Any electrician that cuts the seal of the cooperative shall be charged the then current meter tampering fee.

II. ELECTRICAL INSPECTION

Only electrical inspections issued by approved inspection agencies and accepted or appointed by the local municipality will be considered valid. Electrical inspections shall be required in the following circumstances:

A. Prior to the connection of a new electrical service.
B. Where meter pole disconnects that have been relocated from another location.
C. If an existing main breaker, entrance cable on load side of the meter base, or service panel is replaced.
D. If an existing main breaker, meter base, entrance cable, or service panel is relocated.
E. If the property has been affected by a fire or by a flood where the electrical panel has been reached by high water.
F. If the service has been disconnected for more than 12 months.
G. If a member has been involved in diversion of power.
H. If a member installs a double pole, double throw switch to serve a generator. Socket mounted switches for generators do not require the inspection.

III. RIGHT TO REFUSE SERVICE

The Cooperative reserves the right to refuse service for the following reasons:

A. If three phase service is requested but in the opinion of the Cooperative, the electrical load is not sufficient to justify three phase service (see three phase service).

B. If member's wiring is in a condition considered unsafe by the Cooperative, the Cooperative will refuse connection pending an inspection of the premises by an electrical inspector. This inspection will be performed at the member's expense.

C. If present standards and policies are not met for line extensions to any account.

D. If the member's service entrance has been installed improperly or at the wrong location.

E. If fees and charges have not been paid in full by the new member.

IV. TYPES OF SERVICE AVAILABLE

The type of electrical service available depends upon the electrical characteristics, location, and electrical load. Therefore, before any work is performed on the member's property, the Cooperative should be contacted for consultation.

When operation of the customer's electrical equipment has the tendency to create an unbalance of the Cooperative facilities, every effort must be made by the person installing the equipment to have the electrical load balanced. The Cooperative will provide whatever information it can to aid in this effort.

The following electrical service is available:

Phase	Wire	Voltage
1	3	120/240
1	3	120/208
3	4	120/240
3	4	277/480*
3	4	120/208
3	4	7200/12470**

* Members desiring service at 480V will be required to have loads exceeding 50 KW of demand before service at that voltage will be considered.

** Members desiring high voltage service must provide their own transformers and other high voltage facilities including fusing and an approved three phase gang operated switch.

V. METER LOCATIONS

The meter location will be designated by the Cooperative. In order to avoid confusion, the Cooperative must be consulted about this **before** any electrical work is started. In general, all meter locations will be outdoors at a location easily accessible to Cooperative personnel and close to the Cooperative's transformer location. If a member installs their service entrance at a location other than that designated by the cooperative, the member will be subject to additional charges.

For service locations within a flood plain, the cooperative requires meters and disconnects to be installed above the 100 year flood plain level. In addition, the member must provide safe access to the cooperative employees to get to the meter.

Where members create obstructions to existing meter locations, they are required to relocate the meter at their expense including reimbursing the cooperative for any costs it incurs.

VI. CONSTRUCTION SERVICE

A construction service is a service that will be installed for a short period of time to allow for the construction of a new building and that will be replaced by a permanent service. The installation of the construction service (structure, disconnect, meter base, etc.) is the responsibility of the member (or the contractor). The service structure should be located only **after** meeting with an authorized representative of the Cooperative, so that the structure can be located close to the permanent facilities. See Sketch #1 for details of the overhead construction service structure. If a member elects to install the construction service on a pole, that pole must meet the minimum requirements under pole mounted services. (See Sketch #2). Charges for construction service will be determined by the Cooperative.

If a member requests overhead construction service but wants the permanent service to be underground, the member will be subject to an extra charge to cover the extra costs incurred.

VII. TEMPORARY SERVICE

A service that is expected to be active for a period of less than five years will be considered a temporary service. This type of service is one that will be removed when the temporary project is completed and will not be replaced by a permanent service. These types of installations are generally requested at bridge and highway or building construction projects to provide electric service to the field office trailer and/or construction site. The contractor or other responsible party will be charged for all costs to install and remove the Cooperative's electrical equipment.

VIII. POLE MOUNTED SERVICES

When it is desirable to locate a service on a pole, it shall be a member-owned pole. This pole can be supplied and installed by the Cooperative with the member reimbursing the Cooperative for its costs. Upon approval, a member may provide and set their own pole provided it meets the minimum requirements of 30 foot, Class 6, pressure treated and is set to a minimum depth of five feet. If a member elects to supply their own pole for this purpose, it must be free of rot and able to support a lineman. The Cooperative reserves the right to refuse any pole that does not meet these requirements. Service entrance cable or conduit shall be extended to within 18 inches of the top of the pole. See Sketch #2. At no time will the Cooperative allow an electric service pole to be used by a member to support their television or other antenna.

IX. THREE PHASE SERVICE

Three-phase service is normally used by industrial and commercial business where single-phase service is no longer adequate to meet the member's needs. Three-phase service will be granted to a member if, in the opinion of the Cooperative, the three-phase service is justified (this normally means loads of 10 HP or larger).

If a line extension is required to service a member with three phase service, the Cooperative will perform a financial analysis based on a 60 month time frame. If the Cooperative determines the revenue credit will not offset the cost of the line extension, the member shall pay the Cooperative for 50% of the extension cost in advance and sign a contract with the Cooperative guaranteeing the other 50% through monthly minimum wires revenue per month for a 60-month period. This minimum wires revenue is determined by the estimated cost of construction. If a three phase load is so large that it affects the substation facilities of the cooperative, costs for substation and line improvements will be added to the charges for service.

Three-phase service can be supplied to members in rural areas requesting 120/240 three phase, 4 wire service by extending only two-phase wires forming an open delta configuration. This type of service will not be supplied to members whose demand is expected to exceed 50 KW. In cases where the open delta configuration is used, there is an inherent unbalance characteristic that is unavoidable and will cause motors to run hotter than normal. For this reason, it is recommended that motor sizes be increased where the open delta configuration is used.

Three-phase service at 277/480V three-phase, four wire, will be granted only to those members whose demand is expected to exceed 50KW. Three phase service at 7200/12470V three-phase, four wire is available to those members whose demand is expected to exceed 50 KW who elect to own their own transformers, primary conductor and other high voltage facilities. At the point of contact, the member must provide an approved three-phase gang operated switch and fusing protection acceptable to the Cooperative.

For three phase services where the transformer requirements exceed 1,000 KVA, members will be required to take high voltage service and own, operate and maintain their own transformers. In addition, members taking high voltage service will have to supply and install an approved three phase gang operated switch acceptable to the cooperative and fusing as specified by the cooperative before their transformer facilities.

X. SEASONAL SERVICE

Service to an account shall be considered seasonal if an account is a cottage, hunting camp, or other part-time occupancy that is not the permanent residence of the consumer-member, including garages, workshops and other small business applications expected to use less than 6,000 kWh per year. Service to seasonal accounts is extended under a special set of rules. The cooperative will install a transformer and up to 100 feet of secondary to serve a new seasonal account without charge. For longer services or where a primary extension is required, the member will be required to pay 100% of the cost in advance. The cooperative will retain 35% of the payment and the member will be eligible for refund of some portion of the other 65% over a five year period as wires revenue is received from usage by the member. In no case will the 35% share be refunded and after the first five years has passed, no further refund will be granted.

XI. METERING

Any member who requests service greater than 200 ampere self-contained shall submit to the cooperative a Load Data Sheet. That form can be found at the end of this document.

A. Single Phase

Most single phase service for members is supplied at 120/240 volt. The following information applies to that voltage. Most service is supplied to consumers with a 100, 200 or 400 ampere service entrance. These services are metered with a self contained meter. Members with this type of service supply their own meter base with the meter being supplied by the Cooperative. It should be noted that only Class 200 or Class 320 rated meter bases are approved for use with self-contained underground services. Underground bases with lower rating have insufficient room for proper termination of conductor. Only meter bases approved by the Cooperative are to be used for new installations. Approved meter base information can be found in Appendix A, Approved Meter Service Devices. If there is any question as to the acceptability of a meter base, please contact the Cooperative's member service number, 1-800-726-2324.

If the load current per conductor is expected to exceed 200 amps, an evaluation of the metering needs will be made by the cooperative. If a 400 ampere service is being requested, normally a class 320 meter base will be specified and the appropriate meter used. For installations where over 400 amperes of load are expected, current transformer metering will be used. If current transformer metering is used, an arrangement of metering will be designed by the Cooperative to best fit the situation with the Cooperative supplying the meter base and C.T.'s. Normally rack-mounted C.T.'s are used if the service is overhead. The meter base and rack that holds the C.T.'s are supplied by the Cooperative and installed by the member. The one-inch metering conduit shall be schedule 40 PVC or rigid steel and is to be supplied and installed by the member. Refer to Sketch #7 for details.

If underground service is requested and C.T. metering is employed, a C.T. cabinet measuring a minimum of 36" x 36" x 10" or 48” X 48” X 10” will be supplied and installed by the member. The larger cabinet will be required where a three finger mounting bridge is required. The construction of the C.T. cabinet will include double hinged doors and a latching device that will accommodate a 1/4" diameter seal and shall be made of a minimum of 16 gauge galvanized steel or 16 gauge stainless steel. If the cabinet is to be located outdoors, it must be of a weatherproof design. If the cabinet is to be located indoors, the location must be approved by the Cooperative. A bracket on which the C.T.'s are mounted will be supplied by the Cooperative and must be mounted inside of the C.T. cabinet by the member before the C.T. cabinet is mounted in its permanent position. Three quarter inch or greater treated plywood backing inside the C.T. cabinet is required. The meter base for this type of installation is supplied by the Cooperative and mounted by the member. The one-inch conduit connecting the meter base to the metering cabinet shall be schedule 40 PVC or rigid steel and is to be supplied and installed by the member. Refer to Sketch #8.

It should be noted that more and more members are asking for services in excess of 200 amps even though their present loads are considerably below 200 amps. The Cooperative reserves the right to determine the method of metering for all metering installations based on actual load.

B. Three Phase

Service is often supplied to members with three-phase service through either a self-contained Class 200 or 320 meter socket. Members with this type of service supply their own meter base with the Cooperative supplying the meter. It should be noted that only Class 200 and 320 rated meter bases are approved for use with self-contained underground services. Bases with lower rating have

insufficient room for proper termination of conductor. Only meter bases approved by the Cooperative may be used. Approved meter base information can be found in Appendix A, Approved Meter Service Devices, located at the back of this Installation Guide. A member can verify the acceptability of a meter base by contacting the Cooperative's member service number 1-800-726-2324.

If the load per phase is expected to approach or exceed 400 amps, secondary metering will be used with the arrangement of facilities to be designed to fit the situation. Normally, rack-mounted C.T.'s are used if the service is overhead. The meter base and the rack that holds the C.T.'s are supplied by the Cooperative and installed by the member. The one inch metering conduit shall be schedule 40 PVC or rigid steel and is to be supplied and installed by the member. Refer to Sketch #9 for details.

If underground service is requested and C.T. metering is employed, a C.T. cabinet measuring a minimum of 48" x 48" x 10" or 60" X 60" X 10" will be supplied and installed by the member. The larger cabinet will be required where a five finger mounting bridge is required. The construction of the C.T. cabinet will include double hinged doors and a latching device that will accommodate a 1/4" diameter seal and shall be made of a minimum of 16 gauge galvanized steel or 16 gauge stainless steel. If the cabinet is to be installed outdoors, it must be of a weatherproof design. If the cabinet is to be located indoors, the location must be approved by the Cooperative. A bracket on which the C.T.'s are mounted will be supplied by the Cooperative and must be mounted inside of the C.T. cabinet by the member along with a three quarter inch or greater treated plywood backing before the C.T. cabinet is mounted in its permanent position. The meter base for this type of installation is supplied by the Cooperative and mounted by the member. The one inch conduit connecting the meter base and the metering cabinet shall be schedule 40 PVC or rigid steel and is to be supplied and installed by the member. Refer to Sketch #8. CT metering in a CT cabinet is limited to services below 1,200 amps. All underground conduits coming into a CT cabinet shall be provided and installed by the member. Rigid steel conduit is recommended to provide adequate strength for pulling wire. Normally, the elbows are 36 inch radius steel elbows below a cabinet and the straight conduit into the CT cabinet should also be steel. For services requiring a riser pole, refer to Sketch #17 for conduit attachment details. The conduit stub-up at the riser pole shall be installed **after** the pole has been set in place by Adams Electric, refer to Sketch #17.

For members who install larger services above 1,200 amperes, switchgear metering may be specified by the cooperative. If metering attached to the switchgear is required, a separate metering cubicle shall be used along with a wire pulling section. The cooperative will provide details of its requirements upon request.

For members requesting high voltage service, electric service is provided only from overhead facilities. Metering is provided on a pole installed by the cooperative ahead of the member owned approved gang operated switch and fusing arrangement. The cooperative will install and assemble the metering facilities.

C. Power Factor

All three phase accounts are subject to power factor metering. Accounts of this nature are subject to a power factor penalty if their power factor falls below 90% for a given month. All accounts whose demand exceeds 50 KW with significant motor load should seriously consider the installation of power factor correcting capacitors. Units that switch with the motor are recommended. The cooperative reserves the right to require, as a condition of service, higher power factors than 90%. Normally, new three phase services are expected to maintain 95% power factor or greater. The cooperative further reserves the right to limit a leading power factor.

XII. UNDERGROUND

The Cooperative's distribution system is generally overhead and the normal method of supply is by overhead wires. If a member requests underground service, they will be required to reimburse the Cooperative for the estimated extra cost of providing that underground service.

A. Single Phase

Underground service is often supplied by use of an underground service lateral from an overhead transformer. In this case, the service conductor is supplied and installed by the Cooperative with the member reimbursing the Cooperative for any extra cost of the conductor when an alternate meter location is approved.

Underground service is sometimes provided by use of a padmounted transformer. In many cases, this type of service is supplied in developments. The Cooperative supplies and installs the underground primary, padmounted transformers and foundations. The extra cost for the service lateral is to be borne by the individual member when an alternate meter location is approved. Underground service from a padmounted transformer can also be furnished to individual members, outside of developments, with the member paying the extra costs associated with providing the service underground instead of overhead.

When underground service is requested by a member or developer, the trenching work, conduit, and conduit installation are the responsibility of the member or developer including cover material and backfill. This includes the excavation required for the box pad foundations used to support the transformers. The trench required for primary is to be 38 to 40 inches deep. The trench required for secondary is to be a minimum of 24 inches deep. All trenches shall be free of rocks and debris at the time of cable installation. If a trench has caved in, it will have to be re-excavated before installation of the conductor. Eight inches of stone dust or sand is to be used to protect the underground cable before the trench is completely backfilled. The contractor is responsible to maintain a minimum of 12 inches of clearance from communications facilities of other utilities that occupy an electric service trench. All trenches shall conform to the cooperative requirements shown in Sketches #5, #6, #13, #15 and #16. Unless otherwise specified by the cooperative, three inch schedule 40 PVC will be required as a minimum

No water, sewer, natural gas, propane or member-owned communication and electric lines shall be permitted in the electrical service trench other than perpendicular crossings. Additionally, Members are required to follow the above grade clearances to natural gas and propane equipment as indicated in Sketch #19.

It should be noted that the grading shall be within 6 inches of final grade before the underground conductors will be installed. In developments, grade stakes will be required by the developer at each equipment location before service will be extended.

B. Three Phase

Underground service is normally supplied by use of an underground service lateral from overhead transformers. In this case, the service conductor will be supplied and installed by the member. All three-phase secondary services shall be installed in conduit. The conduit must be of a type approved by the Cooperative and supplied and installed by the member. The Cooperative reserves the right to specify the conduit size. All bends and/or elbows shall be 36 inch radius and in conduit runs over 100 feet, the elbows **must** be steel. Conduits that run under roadways or run in other areas of concern shall be steel or concrete encased schedule 40 PVC with a minimum of six inches of concrete

completely surrounding the conduit. No more than two secondary conduits will be permitted to be mounted on a pole where an underground lateral is provided from an overhead transformer bank. If the load requires additional conduits above two, a padmounted transformer will need to be installed.

Underground service will be supplied by use of a padmounted transformer when (1) requested by the member for aesthetic reasons, or (2) when two service laterals are no longer adequate to handle the member's load or (3) when the cooperative's engineering department determines that the loads are such that a padmounted transformer must be employed. The Cooperative will supply and install the transformer, primary conductor, and primary connectors for transformers 1,000 KVA and below. Secondary service conductors will be supplied and installed by member along with secondary connectors inside the padmounted transformer cabinet. The member will supply the secondary connectors and the Cooperative will install the connectors and land the secondary service conductors onto the Cooperative owned transformer. All secondary runs will be installed in conduit. The conduit must be of a type approved by the Cooperative and supplied and installed by the member. All bends and/or elbows shall be 36 inch radius and in conduit runs over 100 feet, the elbows **must** be steel. Conduits that run under roadways or run in other areas of concern shall be steel or concrete encased schedule 40 PVC with a minimum of six inches of concrete completely surrounding the conduit. The concrete foundation on which the transformer is mounted shall be constructed by the member at their expense per specifications provided by the Cooperative. (Refer to Sketches #11 & #12). In some cases, protective bollards will be required around a three phase padmounted transformer. When specified by the cooperative, these bollards shall be installed and maintained by the owner as shown in Sketch #20.

For transformers over 1,000 KVA, the member shall own the transformer, primary and secondary conductors and shall take primary service.

All trenching, cover, and backfill work is the responsibility of the member or developer. All conduit installations for three phase service must be inspected by a cooperative representative **before** the stone dust cover, concrete encasement or backfill is added. Failure to wait for this inspection by the contractor will prevent connection of the service.

Since much of the material supplied by the Cooperative requires a long lead time, the Cooperative must be informed of the member's need for underground service a minimum of three months before service is required.

C. Subdivisions

Subdivisions will, in general, require underground service. See Sketch #18 for coordination of telecom pedestals with Adams' transformer or pedestal locations. For developments of 10 or more lots, the developer will be required to do the following:

- Provide an electronic drawing, in DWG file format, of all planned construction.
- Pay any required fees.
- Level the site to within 6 inches of final grade in any section where power facilities are installed.
- Provide grade stakes at each transformer location.
- The Cooperative will determine a cost estimate for the extension of electric facilities. If the cost per lot falls below the cooperative's average cost, there will be no charge to the developer. If the cost per lot is greater than the cooperative's average cost, the developer will be responsible for the difference prior to extending any electrical facilities. Additionally, the cooperative may require some form of security depending on the size of development, the construction phasing schedule, and the amount of electric facilities required within the development. Developers may

also be assessed a fee per lot if their planned community has a major impact on substation or transmission capacity. There will be no refund of this fee.

D. Padmounted Transformer Clearances

Adams Electric shall have final say in determining transformer location taking into consideration final grade, accessibility and proximity to such things as primary cable, buildings and vegetation. As a guide, transformers containing less than 2,000 gallons of insulating oil should be separated from buildings by the minimum distance shown in the following table:

Transformer Rating	Minimum Distance From Building
75 kVA or Less	10 Feet
76 kVA to 333 kVA	20 Feet
More Than 333 kVA	30 Feet

Transformer access doors shall have clear and open access for cooperative employees at all times. Members should be aware of this when planting vegetation that with future growth could limit access. For additional transformer pad information see the following Sketches: 11, 12, 13, and 18.

E. Natural Gas and Propane Clearances

Minimum clearances to natural gas and propane equipment shall be strictly followed regardless which facilities were in place first. Members are required to follow the above-grade clearances to natural gas and propane equipment as indicated in Sketch #19.

XIII. MOTORS

The installation of small fractional horsepower motors by the member should create no problem to the Cooperative facilities. However, if a member plans to install any welder, grain dryer, or motors 3 HP and larger, the Cooperative must be notified so that it can examine the adequacy of its facilities. The Cooperative reserves the right to refuse to connect any motor over 3 HP if, in its opinion, the installation of such a motor would endanger the reliability of service to other members.

Motors on heat pump systems and air conditioning systems may present flicker problems; therefore, the cooperative requires soft start on all HVAC equipment rated at 3 tons and above.

Reduced voltage starting will be required on motors if objectionable flicker is expected to result from their operation. In any event, any single-phase motor 10 HP and over and any three-phase motor 25 HP and over must be equipped with reduced voltage starting. All proposed reduced voltage starting systems must be approved by the Cooperative.

Because of the risk of the loss of one or more phases during abnormal system conditions, **it is strongly recommended** that phase failure and or low voltage relays be employed in all polyphase motor installations. These devices are designed to automatically disconnect motors that would be damaged by a phase or voltage failure. Such devices are to be furnished, installed and maintained by the member at the member's expense.

It is recommended that power factor correcting capacitors be installed on all motors over 5 HP. This enables the motor and capacitor to be switched as a unit with the capacitor being off line when the motor is not running.

XIV. POLE ATTACHMENTS

For safety reasons, the Cooperative does not allow the attachment of member-owned items such as antennas, satellite dishes, security lights, electric fencing, hunting stands, private communications cables, etc. to its poles. Further, state law prohibits the driving of nails or staples into wooden utility poles.

XV. STANDBY GENERATION EQUIPMENT

If a member wishes to install a standby generator they must notify the Cooperative prior to installation. In addition, that member must have a U.L. listed double pole-double throw switch installed to prevent any possible electrical connection between the Cooperative's facilities and the member's standby generator. The installation of the double pole-double throw switch shall be certified by an electrical inspector. Refer to Sketch #10 for center pole mounting arrangement.

XVI. PARALLEL GENERATION

If a member wishes to install generation that will feed power back onto the cooperative's system, they need to contact the cooperative to obtain information on interconnection. Solar, wind, bio digester, fuel cell and microturbine systems fall into this category. In no case may these systems be interconnected to the cooperative without the express approval of the cooperative. The terms and conditions under which such generation can be connected to the Cooperative lines will be furnished upon request by contacting the Cooperative's member service number 1-800-726-2324.

XVII. MOBILE HOME SERVICE

Adams Electric Cooperative considers a mobile home to be:

> "A factory-assembled structure or structures equipped with the necessary connections and made so as to be capable of being moved as a unit or units on their own running gear, irrespective of the means of support (foundation)."

The mobile home service equipment shall be installed in accordance with provisions of the national electrical code. The main disconnect shall be located adjacent to and not mounted in or on the mobile home as provided in the national electrical code. This main disconnect, along with the associated meter base, shall be located at a location acceptable to the cooperative.

XVIII. MAJOR LOAD ADDITIONS

The Cooperative **must** be notified of the purchase or installation of major electric consuming devices such as electrical heating equipment, electric hot water heaters, electric dryers, plug-in electric vehicles, ranges, grain dryers etc. so that it can evaluate the adequacy of its service facilities. In the event of damage to buildings, property or the cooperative's facilities due to failure of a member to notify the Cooperative of load additions, the member will be responsible for all damages and cost thereof. A member or their electrician shall fill out the Load Data Sheet and submit it to the cooperative to evaluate load additions over 5KW. The Load Data Sheet must be used any time a member or their electrician requests a service greater than 200 ampere self-contained. That sheet can be found at the end of this document.

A. Water Heaters, Plug-In Electric Vehicles, Etc.

A member who installs one or more tankless hot water heater(s) with a total combined electric load greater than 5kW may be subject to an extra charge to cover the costs incurred by the Cooperative for service upgrades needed to adequately handle the increased load.

Members planning to add a plug-in electric vehicle may be subject to an extra charge to cover the costs incurred by the Cooperative for service upgrades needed to adequately handle the increased load.

B. Heat Pump/Central Air Conditioning

In a heating installation using a heat pump with supplemental resistance heat, the resistance heating capacity should not exceed 70 percent of the amount calculated to meet the maximum heating demand of the home. In addition, the resistance heat elements should be sequenced so that no more than 5,000 watts come on the line at any given time. Heat pumps with compressors above 3 HP must have reduced voltage starting to minimize flicker.

Central air conditioning systems with compressors of over 3 HP shall be equipped with reduced voltage starting to minimize flicker.

C. Welders

If a member installs a welder that creates power quality problems for their neighbors, or themselves, it shall be that member's responsibility to resolve the problem. If the Cooperative has the ability to correct the problem by installing a transformer with a larger than required KVA capacity, this member shall reimburse the Cooperative for the additional cost.

XIX. SHORT CIRCUIT CURRENT

All fused over current devices and/or circuit breakers shall meet requirements of The National Electrical Code. In some areas of the Cooperative's service territory; available fault current may exceed 10,000 amps. If there is some question as to available fault current, contact the Cooperative.

XX. MULTIPLE OCCUPANCY BUILDING

Electrical service is normally supplied to a multiple occupancy building through one service drop with all meters grouped at the same location. If service is requested at more than one location in a multiple occupancy building, it will be provided only if properly approved fire walls separate the various sections in which service has been requested. For a fire wall to be properly approved, the Cooperative must receive certification of the wall's suitability from (1) a fire marshal, (2) an inspector for the owner's fire insurance company, or (3) a local building code inspector (if one exists). Without proper certification of the fire wall, a request for more than one service drop to one structure will be denied.

XXI. MULTIPLE REQUESTS FOR SERVICE ON ONE PROPERTY

The Cooperative normally supplies one electric service to each property requesting service. However, each member is entitled to separate services for residential use and for farm or business use. If a member desires multiple service locations for business or farm use, the member will be responsible to bear the extra cost to provide those services.

XXII. INTERRUPTIBLE LOADS

The cooperative provides several types of interruptible rate options to its members. The most popular program involves interruptible loads in a private residence which can include heating and cooling systems, water heaters or other controllable loads. These loads are controlled by a cooperative owned central control system and a signal is sent to the member's home during peak periods to initiate load shed. Generally, these controllable systems are sub-metered and are known as Controlled-Load Service. The cooperative will provide a specially equipped meter with a built in disconnect device which is capable of

energizing and de-energizing the Controlled-Load Panel via remote control. Where sub-metering of a controlled-load service is impractical, the cooperative will consider a separate service that parallels the standard service for service to the controlled-load panel. The member is responsible to install a meter base acceptable to the cooperative to accept a class 200 meter. If a member has a controllable load that requires more than 200 amps single phase, a special control scheme will be designed by the cooperative that normally involves a contactor. Where a three phase account requests this type of service, a separate service that parallels the standard service will be required and a contactor will be employed for control purposes. For these types of controllable loads, no bypass device will be permitted.

The cooperative also provides direct load control of water heaters and air conditioners with a socket mounted control. Members with these types of controls also receive a rate incentive to participate. The controls for this program is owned and installed free of charge by the cooperative.

The cooperative also runs a program to curtail business loads during peak periods. These members also receive a rate incentive to participate. The cooperative, through its direct load control system, can send an automated signal to shed loads or the cooperative can notify the member of the need to curtail load. For these types of loads, the cooperative will install a special interval recording meter on the business account to verify the load curtailment. If an automated control scheme is selected by the member, the cooperative will install a special switch to provide a normally open or normally closed contact at the cooperative's expense.

XXIII. LIGHTING

The cooperative offers four different lighting products to serve our members' needs. Those products are as follows:

Type	Wattage	Usage
LED	40	Area lighting
LED	200	Flood lighting
LED	95	Street lighting
LED	45	Decorative Lighting

In general, the cooperative will install, without charge, a light fixture and up to 150 feet of overhead duplex at a location where an existing pole is located and where 120 volt secondary is available. If a pole needs to be installed to support the light or if a transformer needs to be installed to feed the light, an extra charge will be borne by the member. If more than 150 feet of duplex is required or if additional lift poles are needed to feed a light, any additional costs will be paid by the member requesting the light. If an existing pole must be upgraded, or if facilities on an existing pole must be rearranged to accommodate the light, the member will pay the costs for those improvements.

The cooperative can feed lights in two ways using underground secondary. Where a decorative light fixture is desired, the cooperative can provide an LED colonial fixture mounted on an 18 foot fiberglass pole. The member is responsible for all trenching and backfilling. The cooperative can also mount any of its other lights on a wooden pole fed from underground secondary when necessary. Again, the member will pay for the wooden pole, any additional secondary over 150 feet and provide any required trenching and backfilling.

Any member requesting lighting service must take the service for a minimum of 12 months.

APPENDIX A: APPROVED METER SERVICE DEVICES

Adams Electric Cooperative approves all 200 amp and 400 amp (Class 320) self-contained meter socket for 240 volt single phase, 120/208 volt and 120/240 volt 3 phase services, which PPL currently lists on their web site.

Adams Electric Cooperative also permits the use of a 100 amp, 125 or 150 amp overhead self-contained meter socket which will accept a class 200 meter when placed ahead of a Controlled-Load Panel as indicated in section **XXIV - INTERRUPTIBLE LOADS.**

Use the following URL, web link, to access the Approved Meter Service Devices web site supported by PPL.

Approved Meter Services Devices

Additionally, all relevant notes associated with the PPL Approved Meter Service Devices web pages shall apply as if contained within this Electric Service Installation Guide.

APPENDIX B: TYPICAL INSTALLATION DRAWINGS

Sketch #1 .....Temporary Service Structure

Sketch #2 .....Overhead Service to a Pole

Sketch #3 .....Standard 100 or 200 Amp Overhead Service Installation

Sketch #4 .....Service Mast Installation

Sketch #5 .....200 Amp & 400 Amp Residential Underground Service Installation

Sketch #6 .....Mobile Home – Underground Service Installation

Sketch #7 .....Single Phase C.T. Service

Sketch #8 .....Secondary Service Instrument Transformer Cabinet

Sketch #9 .....Three Phase C.T. Service Overhead

Sketch #10 .....Stand-By Generator – Pole Mounted Equipment Diagram

Sketch #11 .....Concrete Pad Foundation Pad Mount Transformer Three Phase 75 to 500 kVA

Sketch #12 .....Concrete Pad Foundation Pad Mount Transformer Three Phase 500 kVA or Larger

Sketch #13 .....Transformer Foundation and Trenching Requirements

Sketch #14 .....Decorative Street Light Foundation

Sketch #15 .....Sectionalizing Foundation and Trenching Requirements

Sketch #16 .....Secondary Pedestal Requirements

Sketch #17 .....Multiple Conduit Riser Stub-Up Requirements

Sketch #18 .....Transformer and Communication Pedestal Configuration

Sketch #19 .....Standard Clearances for Natural Gas or Propane

Sketch #20 .....Protective Bollard Installation Guide

Sketch #21 .....Primary Metered Service

ADAMS ELECTRIC COOPERATIVE, INC.

TEMPORARY SERVICE STRUCTURE

Note:
All materials furnished and installed by contractor except as noted.

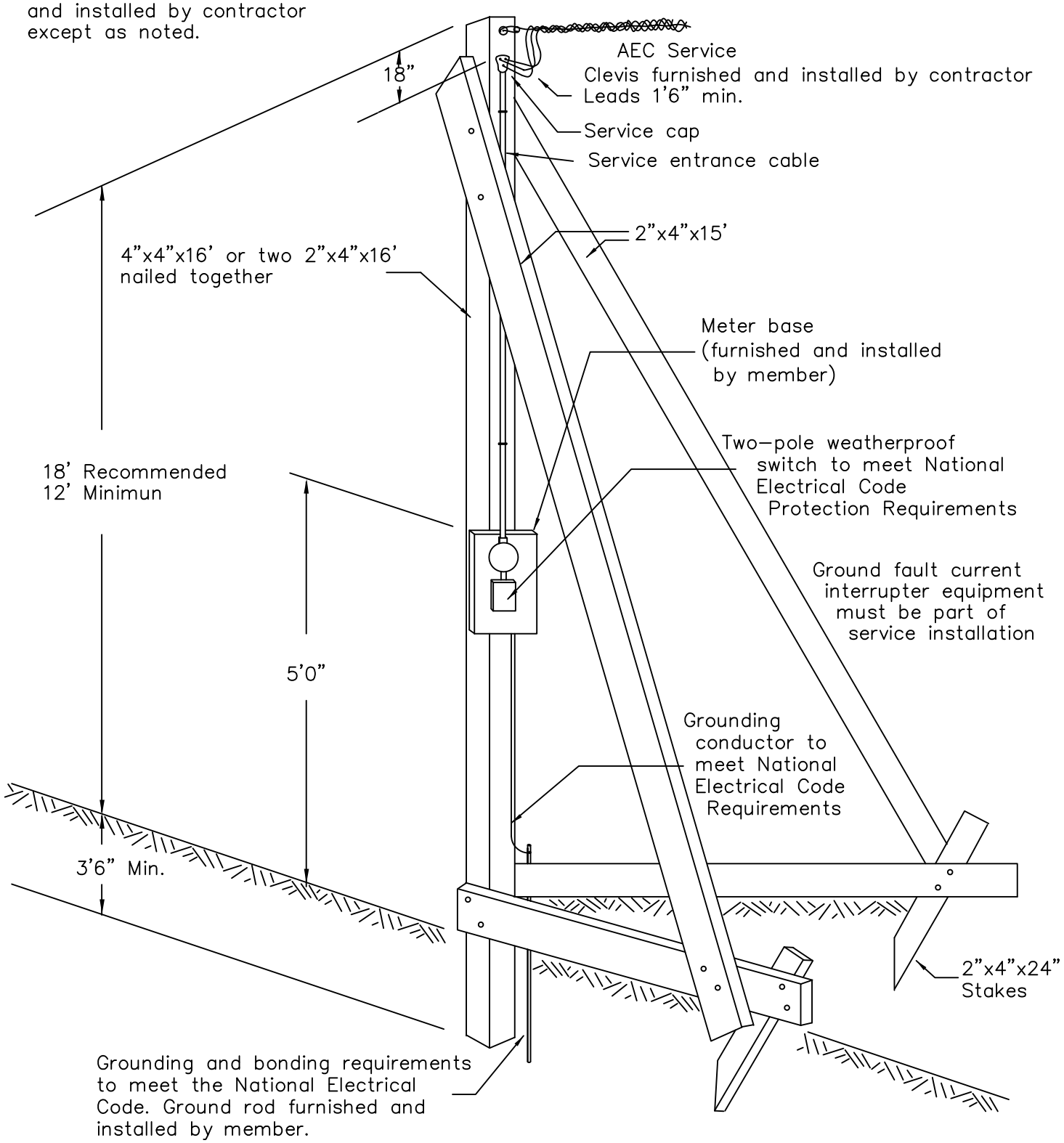

SKETCH #1 Revised 10/25/04

ADAMS ELECTRIC COOPERATIVE, INC.

OVERHEAD SERVICE TO A POLE

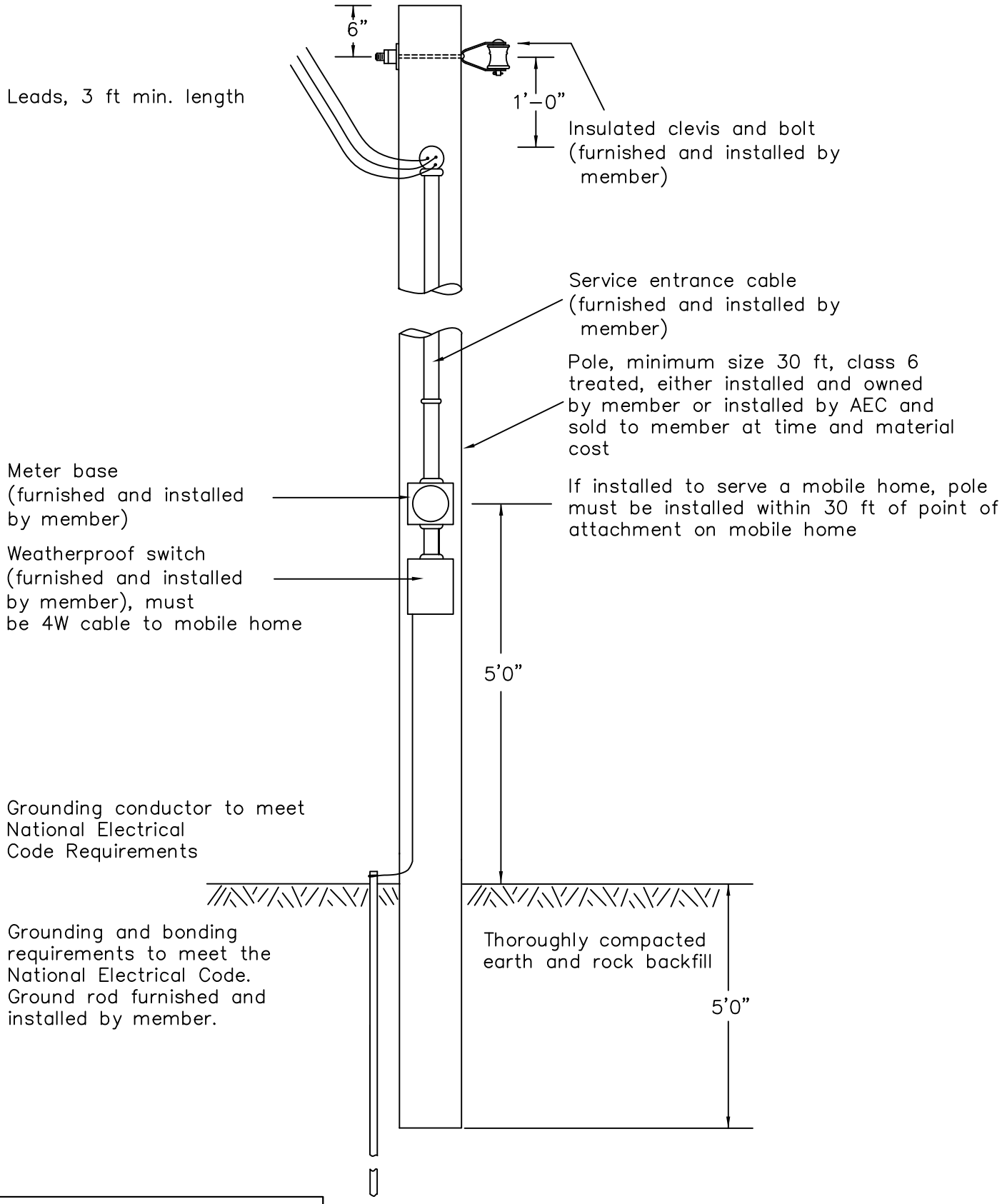

SKETCH #2 Revised 10/25/04

ADAMS ELECTRIC COOPERATIVE, INC.

STANDARD 100 AMP OR 200 AMP OVERHEAD SERVICE INSTALLATION

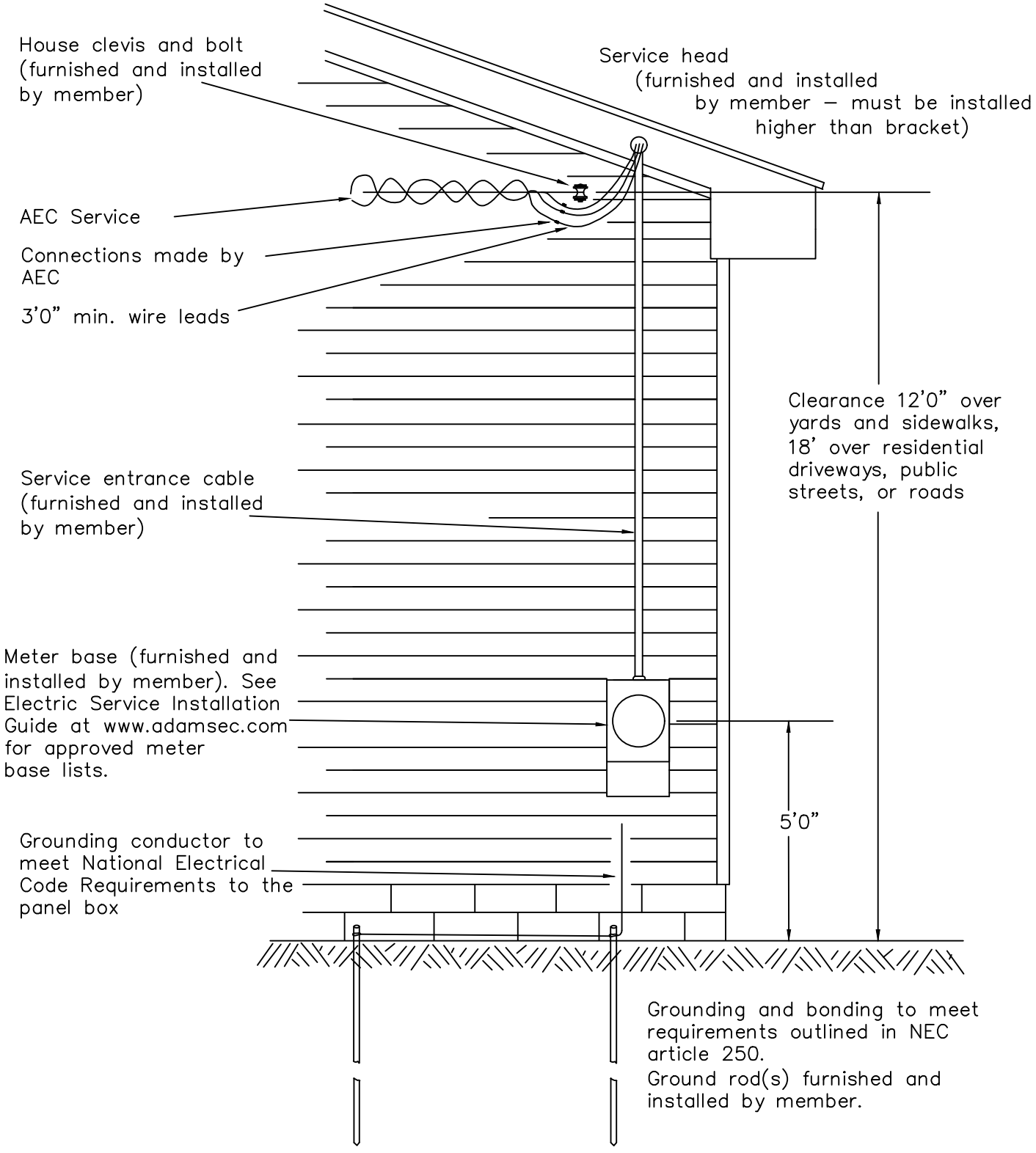

SKETCH #3 Revised 02/1/23

ADAMS ELECTRIC COOPERATIVE, INC.

SERVICE MAST INSTALLATION

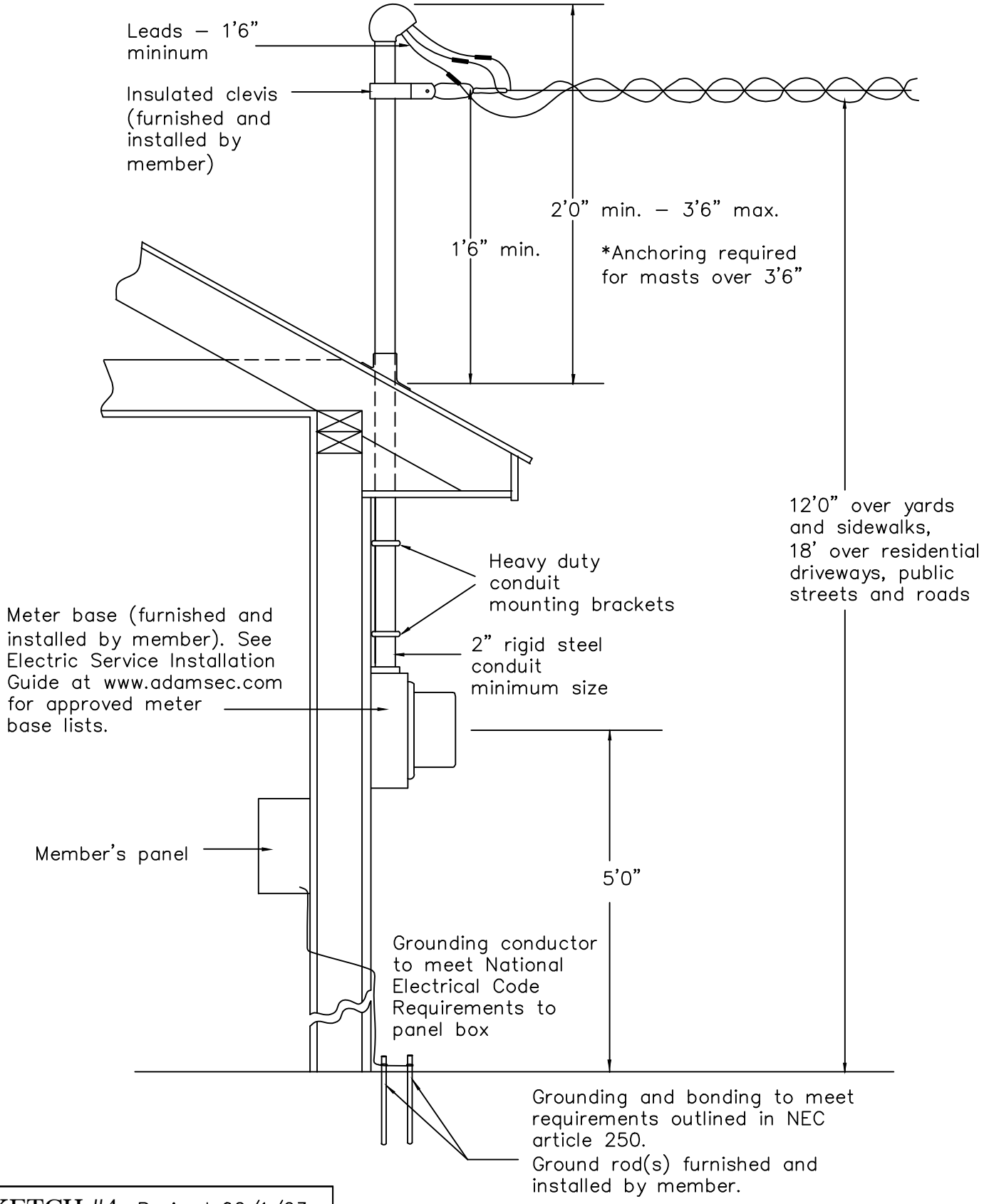

SKETCH #4 Revised 02/1/23

ADAMS ELECTRIC COOPERATIVE, INC.

200 & 400 AMP RESIDENTIAL UNDERGROUND SERVICE INSTALLATION

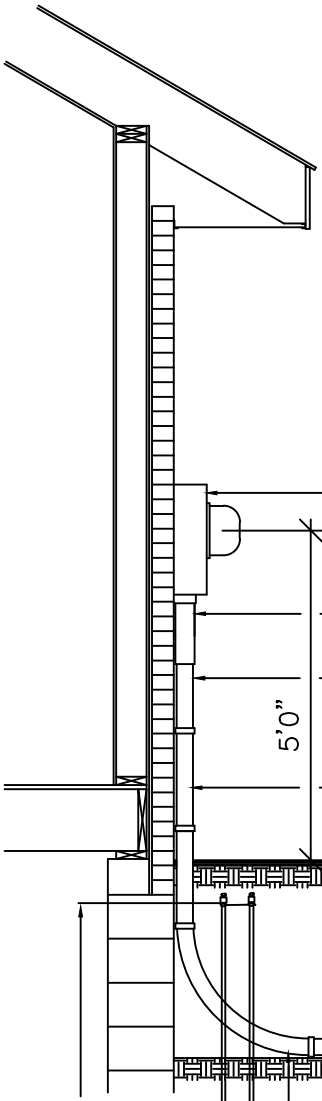

NOTE:
Conduit and two (2) straps must be installed before trench is inspected and work scheduled by the construction superintendent.

Meter base (200 amp minimum, underground type, furnished by member)

Slip–joint conduit required

Conduit firmly fastened with minimum of two straps

5'0"

3" PVC schedule 40 conduit (furnished and installed by member)

24"–36" to be maintained at all times

To AEC structure

Grounding to meet National Electrical Code Requirements to panel box

**NOTE: Ground wires not permitted in meter base.

3" PVC schedule 40 conduit, length of trench. Installed with pull string and glued connections. (all furnished and installed by member)

36" min. radius 90 degree sweep elbow (3" PVC schedule 40) elbow must rest on compacted soil or be supported to eliminate settlement (furnished and installed by member)

Grounding and bonding to meet requirements outlined in NEC article 250. Ground rod(s) furnished and installed by member.

METER BASE DETAIL

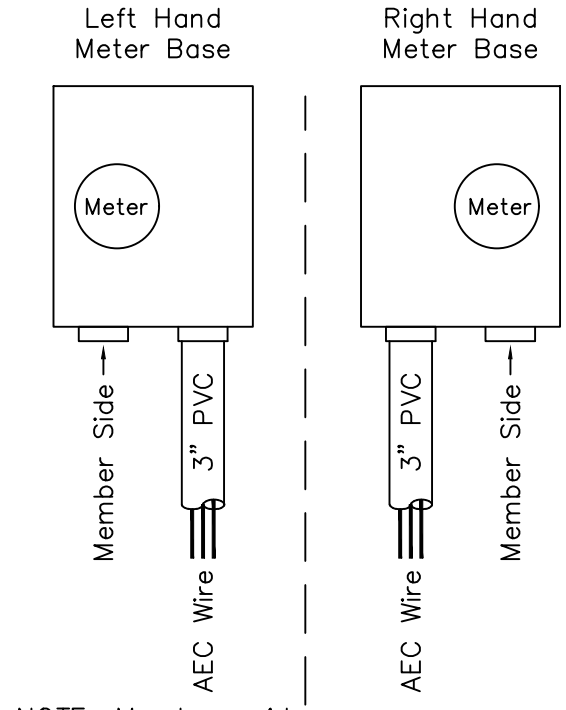

**NOTE: Members side cables can not cross AEC side cables within meter base.

SECONDARY TRENCH DETAIL

Member shall perform all trenching and backfilling

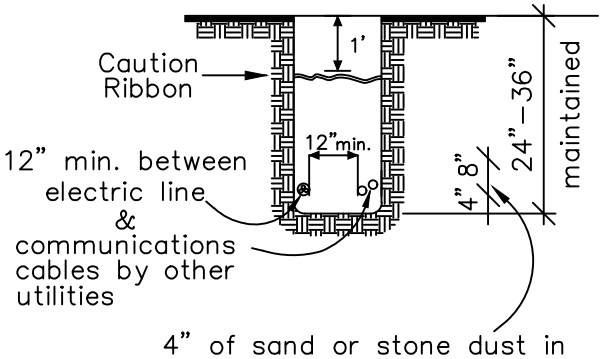

4" of sand or stone dust in bottom of ditch & another 8" on top of lines.

SKETCH #5 Revised 02/1/23

ADAMS ELECTRIC COOPERATIVE, INC.

MOBILE HOME - UNDERGROUND SERVICE INSTALLATION

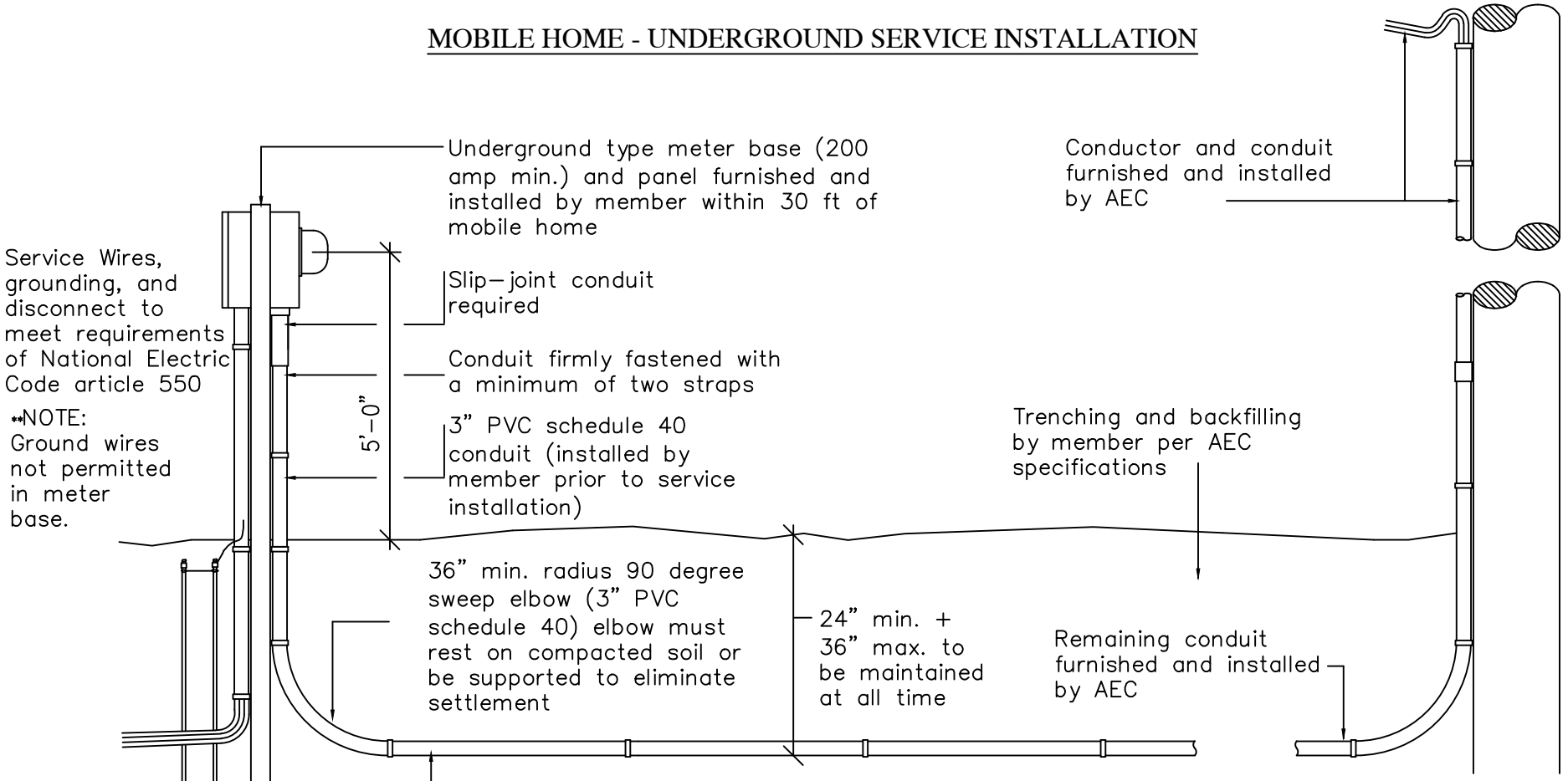

SECONDARY TRENCH DETAIL

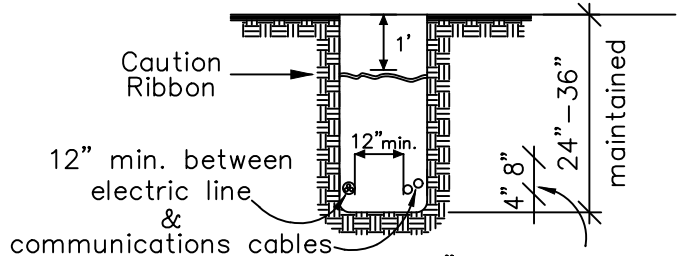

SKETCH #6 Revised 11/08/21

ADAMS ELECTRIC COOPERATIVE, INC.

SINGLE PHASE C.T. SERVICE

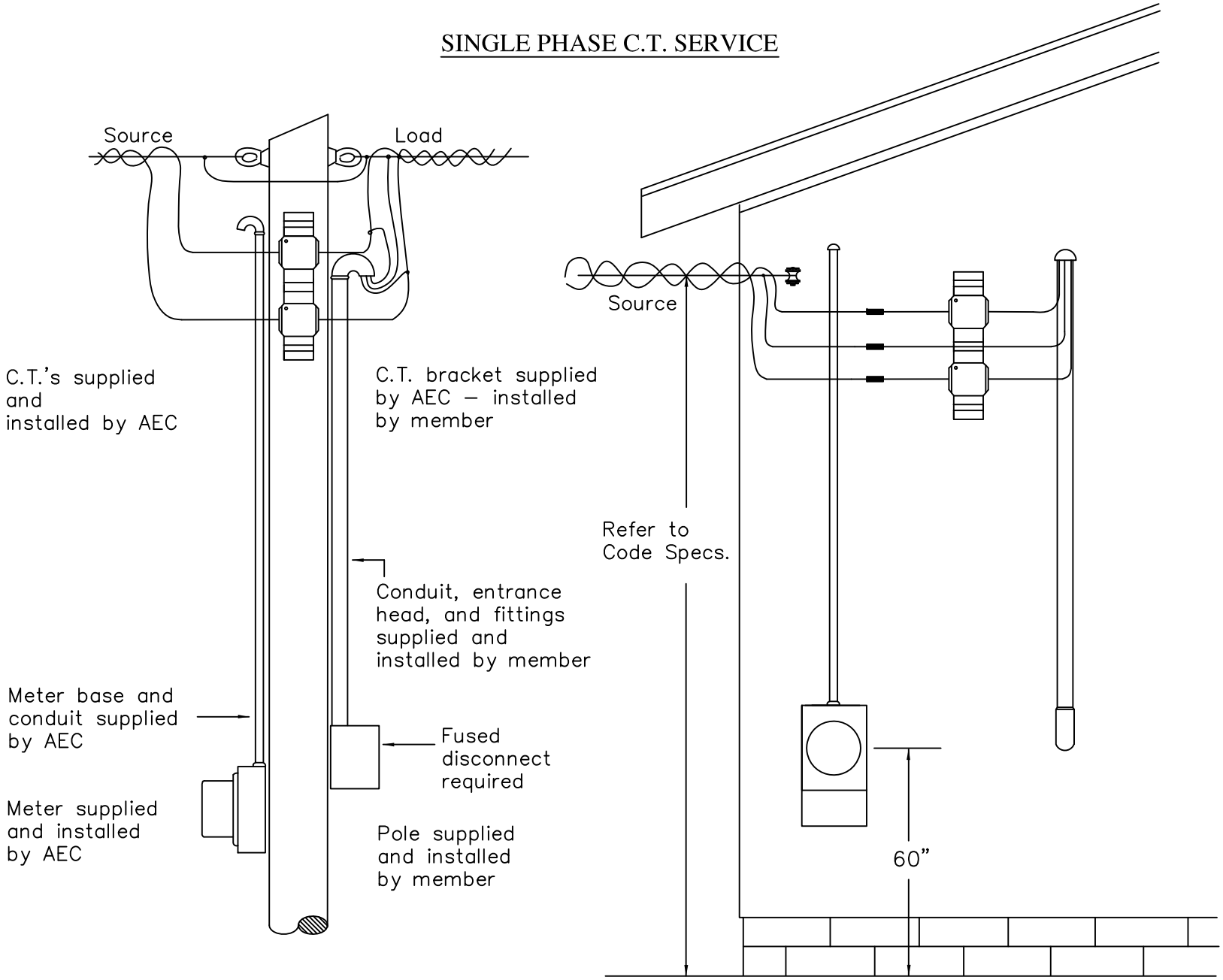

SKETCH #7 Revised 12/16/03

ADAMS ELECTRIC COOPERATIVE, INC.

SECONDARY SERVICE INSTRUMENT TRANSFORMER CABINET

Single Phase (up to 800 Amp)

3 Connection Benelex – Min. Cabinet Size: 48" x 48" x 10"

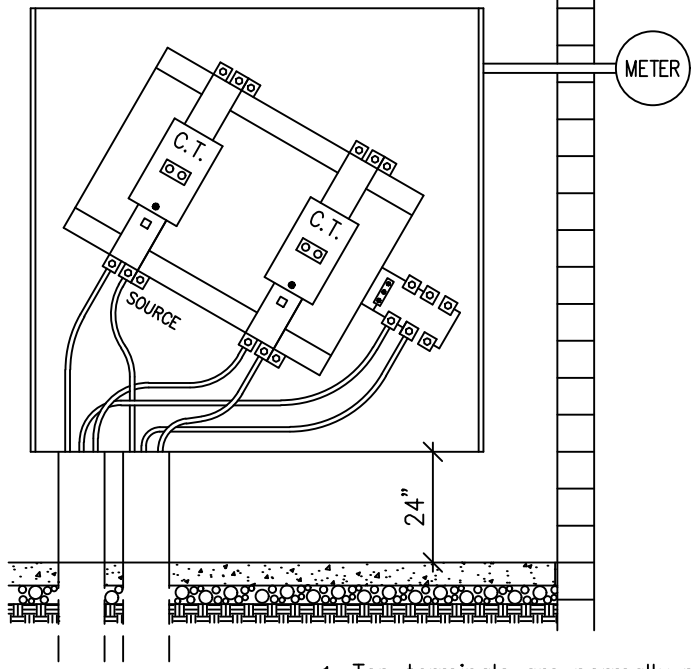

Polyphase (up to 1200 Amp)

3 Connection Benelex – Min.Cabinet Size: 48" x 48" x 10"

5 Connection Benelex – Min.Cabinet Size: 60" x 60" x 10"

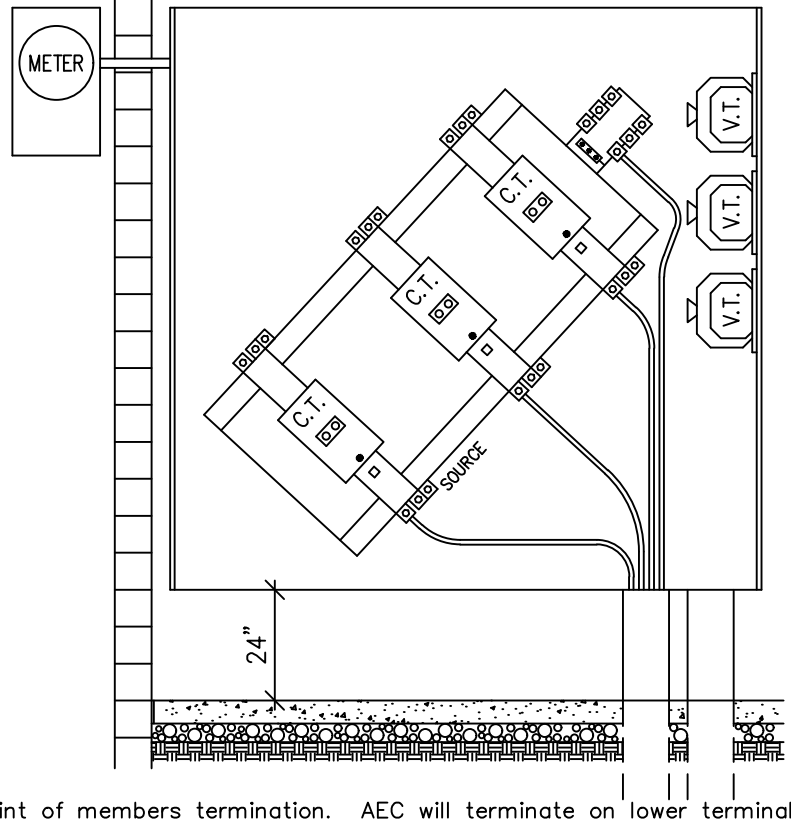

1. Top terminals are normally point of members termination. AEC will terminate on lower terminal with C.T. mounted as shown.
2. Meter base to be mounted on outside of structure with 1" conduit between base and cabinet.
3. A piece of ¾" treated plywood shall be mounted in the rear of the CT cabinet.
   For a 48" cabinet, ¾" x 34" x 34" treated plywood is required.
   For a 60" cabinet, ¾" x 48" x 48" treated plywood is required.
4. Benelex mounting unit to support C.T.'s and terminators – supplied by AEC.
5. Neutral termination bar to be bonded to cabinet.
6. The cabinet shall be constructed on #16 gauge steel, or stainless steel, having double hinged doors with locking hasp, for padlock.
7. Conduit will be made with no less than 36" bending radius (No LB's).
8. Use steel elbows and steel conduit on source side into cabinet. Conduits to be located as near as possible to door side of cabinet so Greenlee pulling tool can be used. 4" steel conduits normally required.
9. **Conduit installation must be inspected before backfilling or job cannot be scheduled for construction.**
10. Meters to be located outdooors no more than 25' from the C.T. cabinet.
11. Bond neutral wire to cabinet with minimum of #2 stranded copper.
12. When 277/480 volt service is supplied, voltage transformers are used. Install in one side of cabinet a ¾" x 10" or 1 ½" x 10" treated plank the full height of the cabinet to mount V.T.'s.
13. AEC to supply Benelex unit and meter base.
14. AEC to supply and install C.T.'s, V.T.'s, meter, and source secondary conductors.

SKETCH #8 Revised 4/8/24

ADAMS ELECTRIC COOPERATIVE, INC.

THREE PHASE C.T. SERVICE OVERHEAD

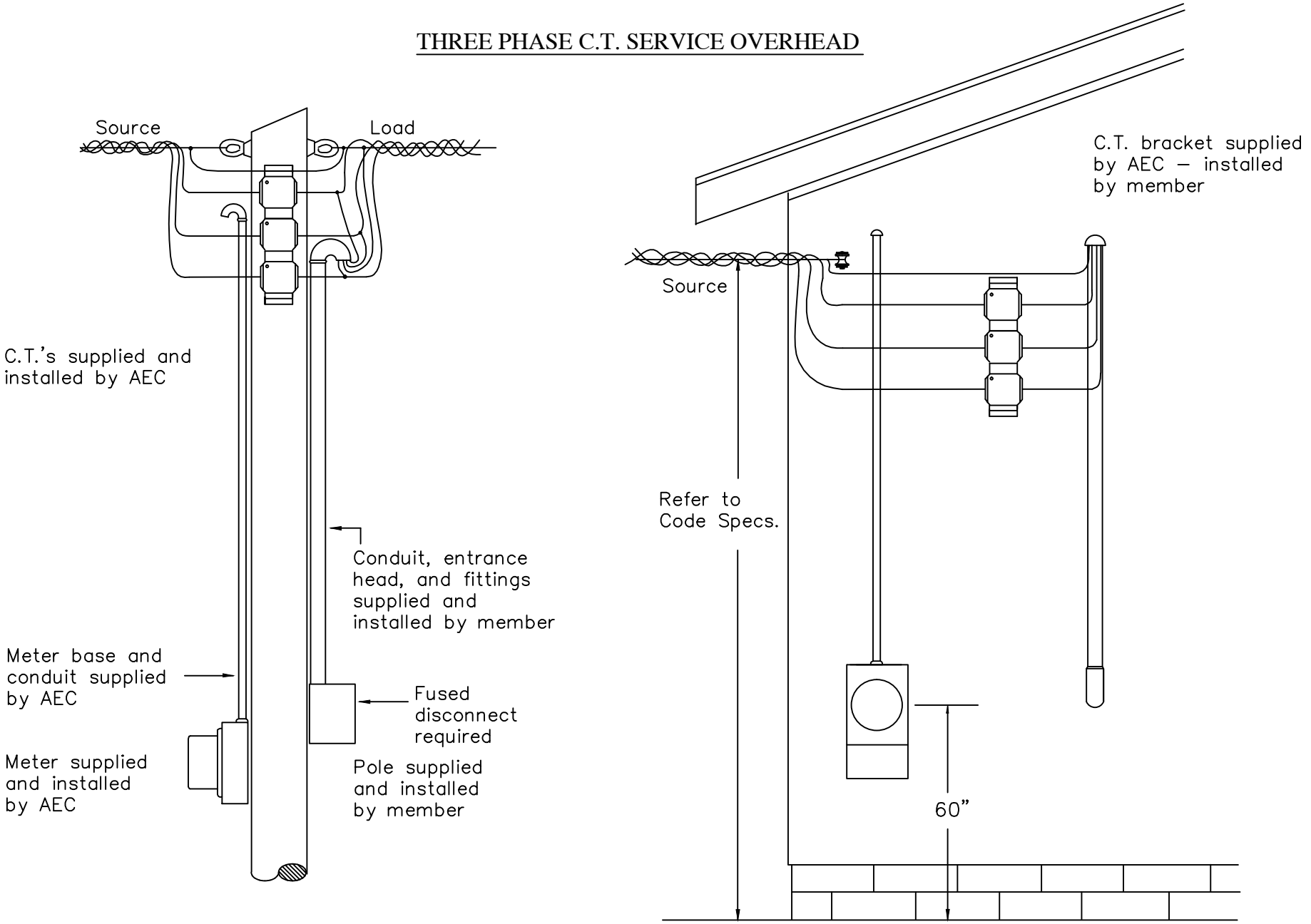

SKETCH #9 Revised 10/02/12

ADAMS ELECTRIC COOPERATIVE, INC.

STAND-BY GENERATOR - POLE MOUNTED EQUIPMENT DIAGRAM

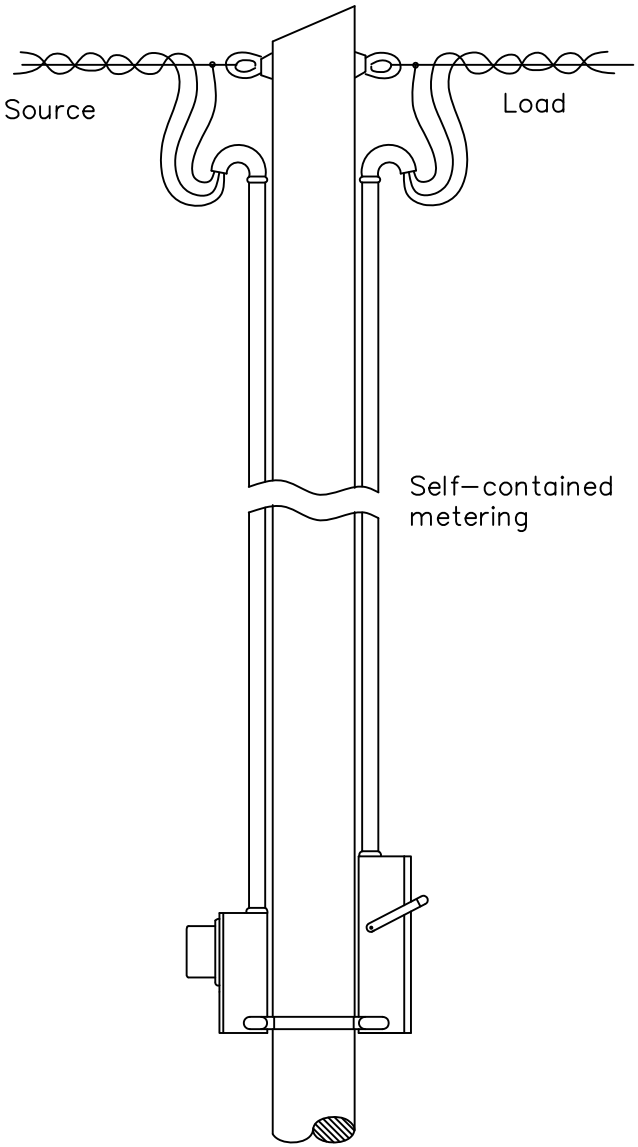

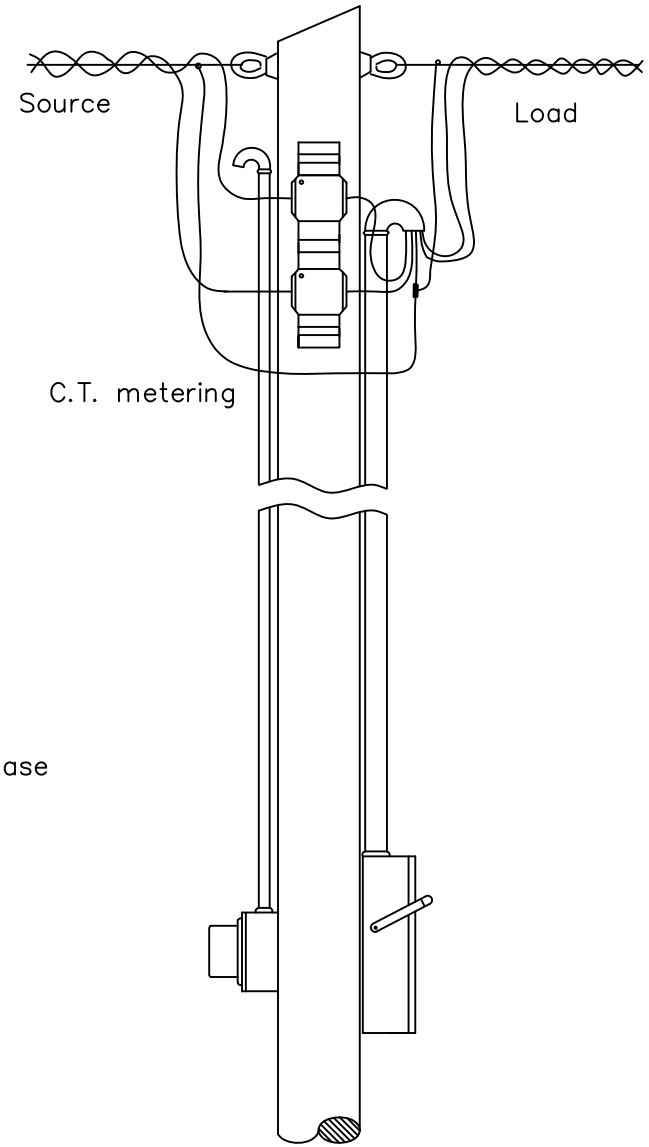

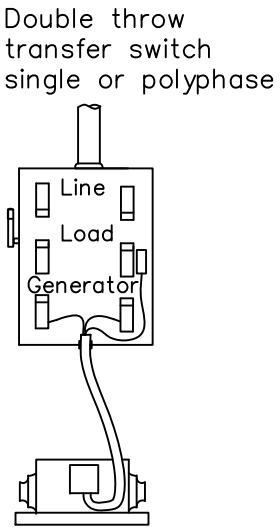

SKETCH #10 Revised 12/16/03

ADAMS ELECTRIC COOPERATIVE, INC.

CONCRETE PAD FOUNDATION PAD MOUNTED TRANSFORMER
THREE PHASE 75 TO 500 KVA

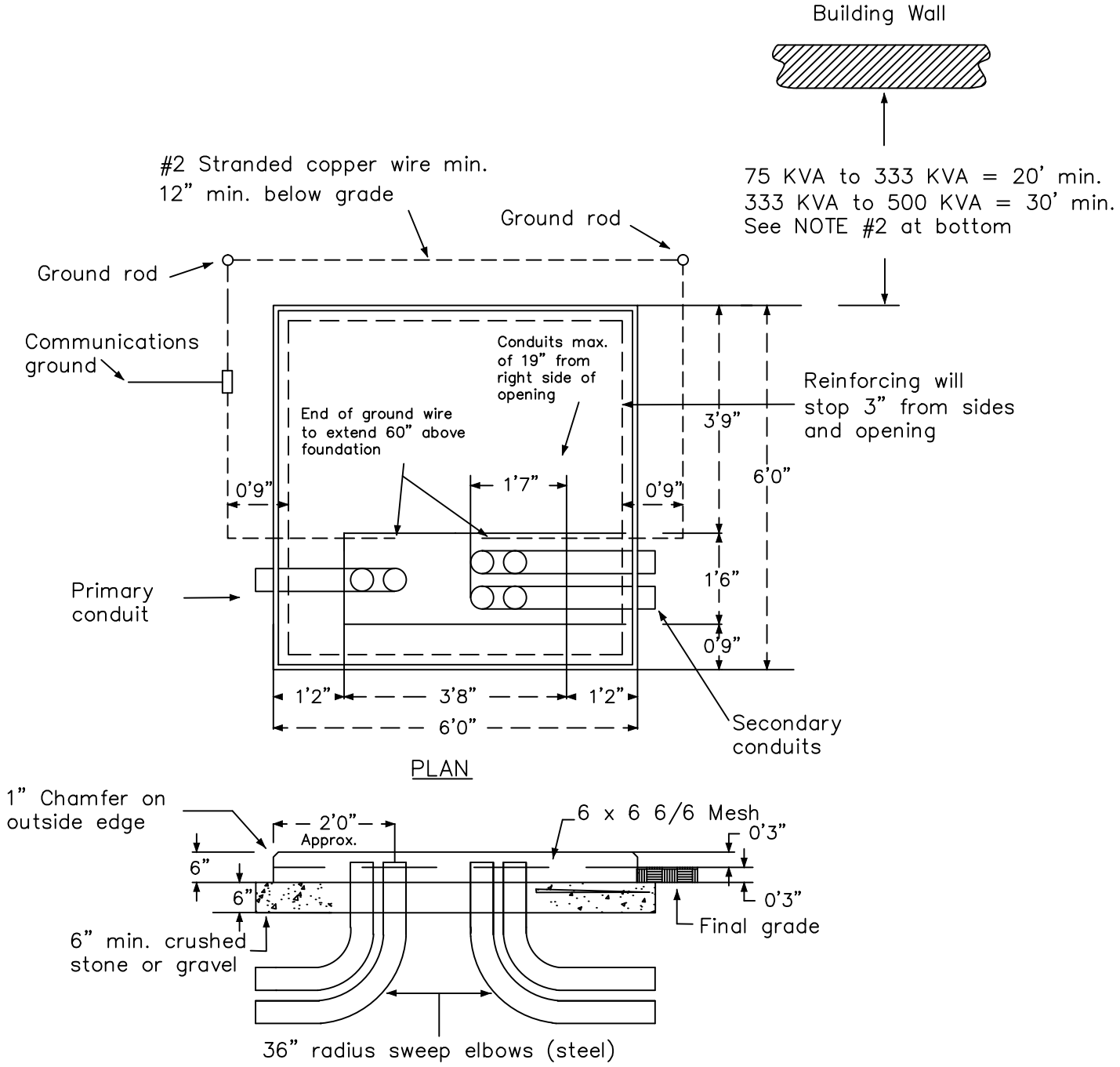

NOTE #1
Volume of concrete is approx. 0.32 cu yds.

NOTE #2
If transformer is located between 20 ft and 50 ft of a building the exposed walls of the building should constitute or be protected by at least a 2 hour fire rated barrier. The barrier should extend in the vertical and horizontal directions such that any point of the transformer is a min. of 50 ft from any point on the wall not protected by the barrier.

SKETCH #11 Revised 10/22/12

ADAMS ELECTRIC COOPERATIVE, INC.

CONCRETE PAD FOUNDATION PAD MOUNTED TRANSFORMER
THREE PHASE 750 KVA OR LARGER

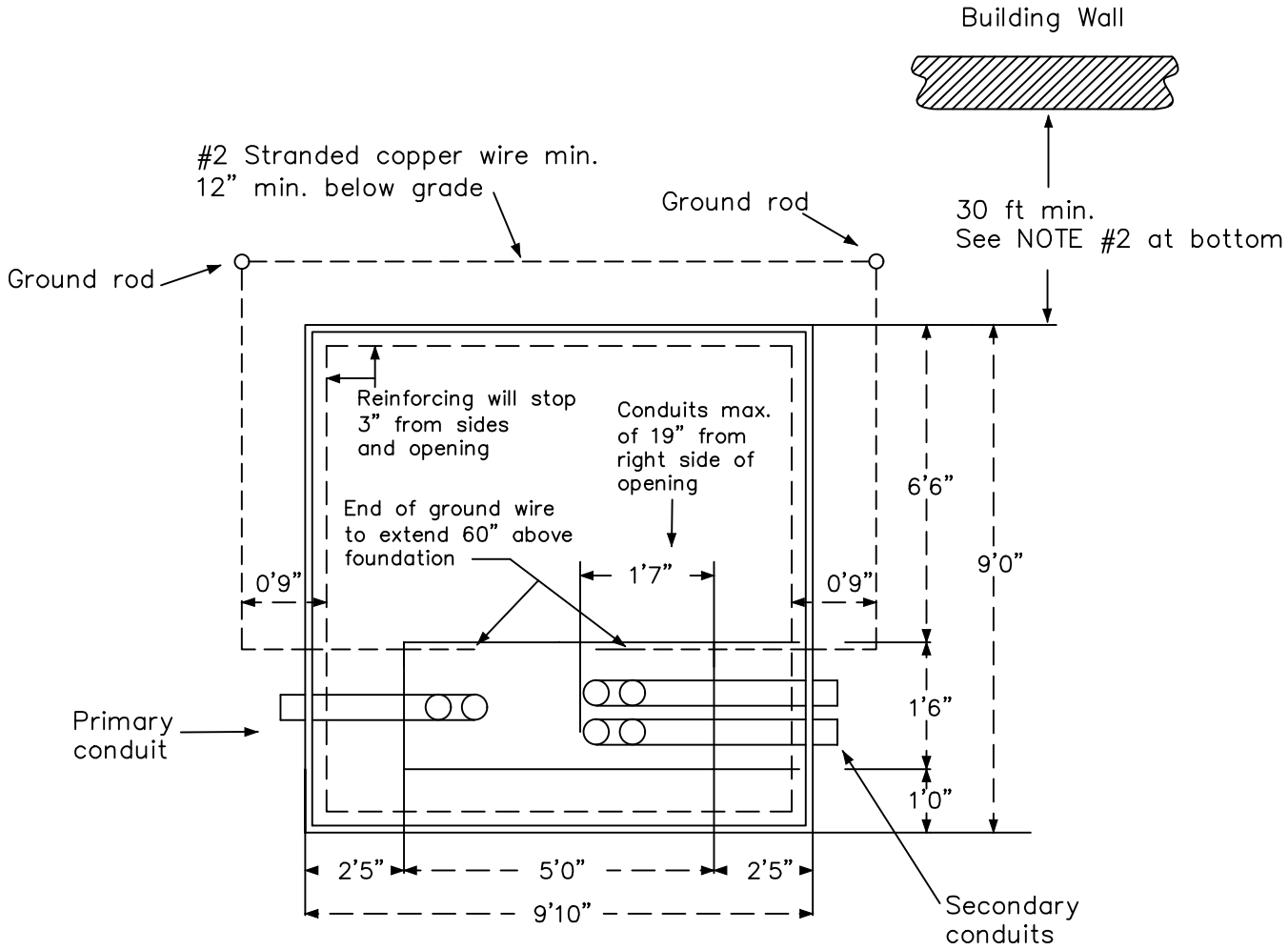

PLAN

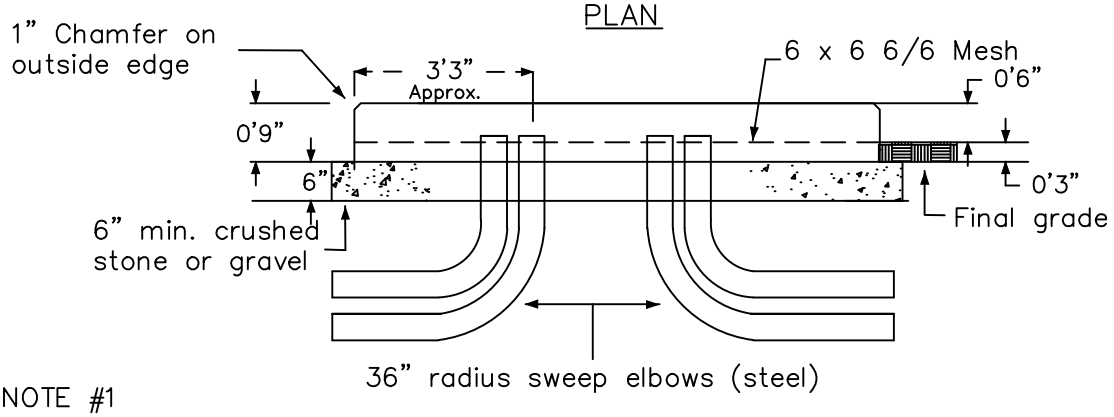

NOTE #1
Volume of concrete is approx. 1.7 cu yds.

NOTE #2
If transformer is located between 20 ft and 50 ft of a building the exposed walls of the building should constitute or be protected by at least a 2 hour fire rated barrier. The barrier should extend in the vertical and horizontal directions such that any point of the transformer is a min. of 50 ft from any point on the wall not protected by the barrier.

SKETCH #12 Revised 12/16/20

ADAMS ELECTRIC COOPERATIVE, INC.

TRANSFORMER FOUNDATION AND TRENCHING REQUIREMENTS

SIDE VIEW

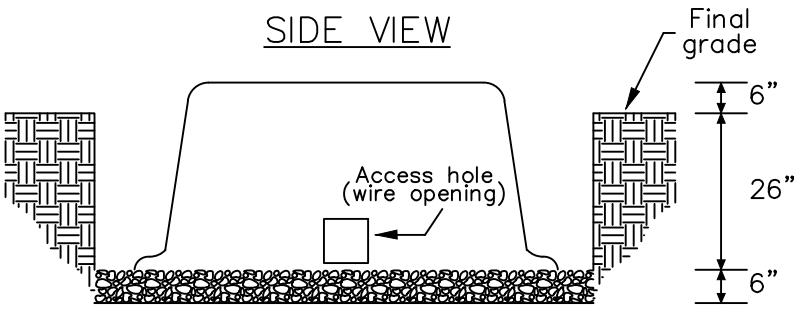

Dig 6' x 6' x 32" deep, install 6" stone base

Transformer foundation pad furnished and installed by AEC

Stone base furnished and installed by member

Minimum distance of transformer to building is 10 feet

Transformer to be a minimum of 10 feet from driveway and parking areas

TOP VIEW

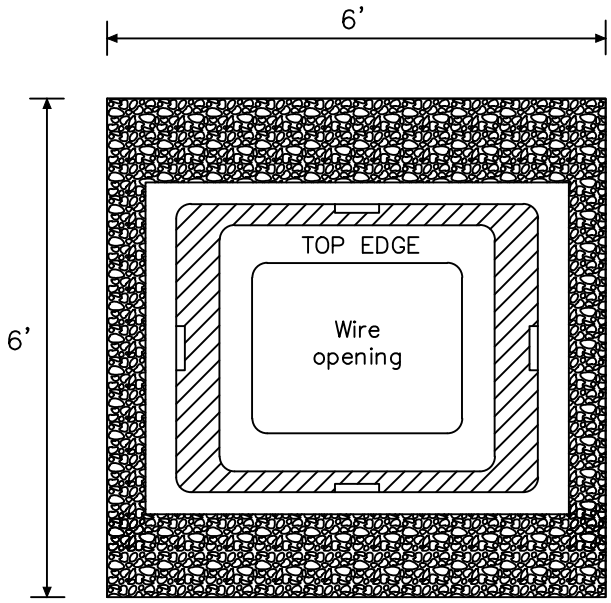

TRENCH DETAIL

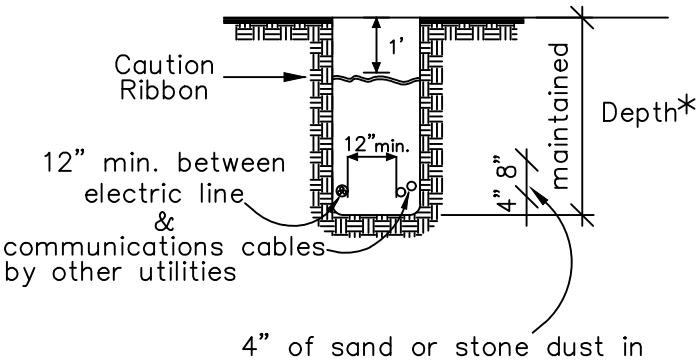

*Depth(measured from final grade to sand/stone dust)
24" – 36" for secondary underground
38" – 40" for primary underground

NOTES:

1. Install caution ribbon in trench at 1 ft below final grade. Member shall perform all trenching and backfilling.
2. Trenches to be jointly occupied by Electric, Telephone, and CATV cables must have a minimum width of 18". A MINIMUM OF 12" SEPARATION IS REQUIRED BETWEEN ELECTRIC AND COMMUNICATIONS CABLES.
3. Trench floor must be lined with 4" of sand or stone dust/screenings. Backfill with same.
4. Trench and transformer foundation must be backfilled before cable can be energized.
5. No water, sewer, storm drain, natural gas, propane or member–owned communication and electric lines shall be permitted in the electrical service trench other than perpendicular crossings.
6. No horizontal fittings will be permitted unless approved in advance by the Cooperative.

SKETCH #13 Revised 01/12/17

ADAMS ELECTRIC COOPERATIVE, INC.

DECORATIVE STREET LIGHT FOUNDATION

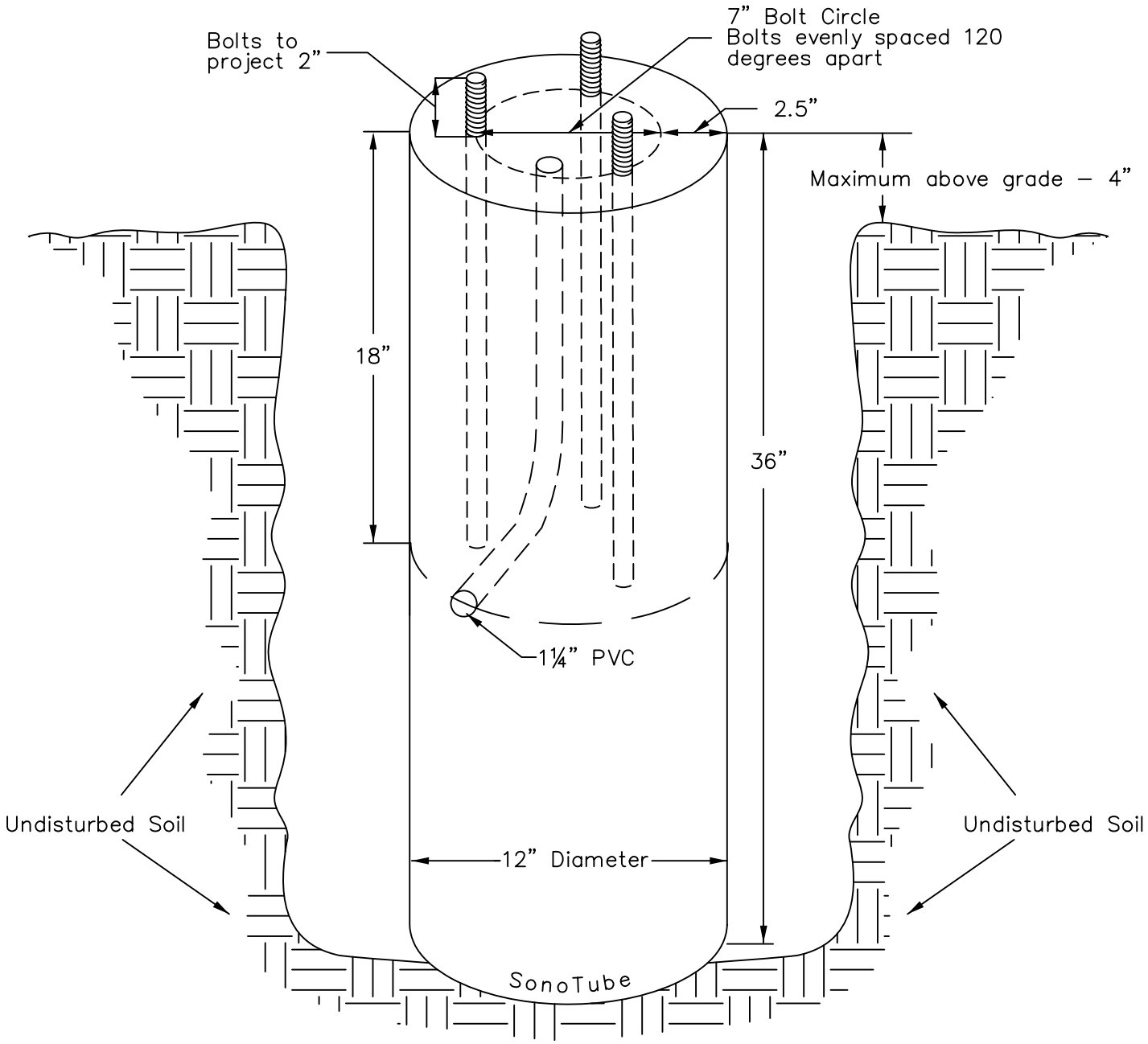

NOTES

1. Anchor bolts provided by AEC - ¾" x 20" - are to be installed in a 7" diameter circle using template provided. They are to project 2" above the foundation.
2. 1¼" schedule 40 PVC conduit is to be used for the electrical connection.
3. A minimum of 32" of the foundation is to be below grade.
4. The foundation is to sit on undisturbed soil.
5. Each foundation requires 0.09 cubic yards of concrete.

SKETCH #14 Revised 04/04/06

ADAMS ELECTRIC COOPERATIVE, INC.

SECTIONALIZING FOUNDATION AND TRENCHING REQUIREMENTS

SIDE VIEW

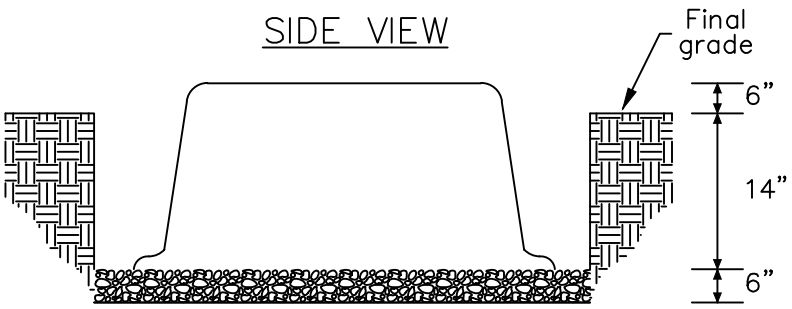

1Ø Foundation: Dig 4'x3.5'x20" deep
3Ø Foundation: Dig 8'x3'x20" deep
install 6" stone base

Sectionalizing cabinet foundation pad furnished and installed by AEC

Stone base furnished and installed by member

Minimum distance of cabinet to building is 10 feet

Cabinet to be a minimum of 10 feet from driveway and parking areas

TRENCH DETAIL

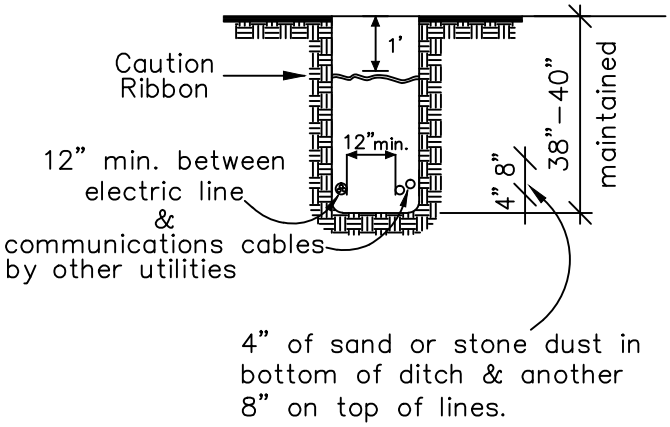

NOTES:

1. Install caution ribbon in trench at 1 ft below final grade. Member shall perform all trenching and backfilling.
2. Trenches to be jointly occupied by Electric, Telephone, and CATV cables must have a minimum width of 18". A MINIMUM OF 12" SEPARATION IS REQUIRED BETWEEN ELECTRIC AND COMMUNICATIONS CABLES.
3. Trench floor must be free of rocks and debris, and lined with top soil or screenings. Backfill with same.
4. Trench and sectionalizing cabinet foundation must be backfilled before cable can be energized.
5. No water, sewer, storm drain, natural gas, propane or member–owned communication and electric lines shall be permitted in the electrical service trench other than perpendicular crossings.
6. Electric conduit may need to be steel or schedule 40 PVC concrete encased. Refer to Section XII–B for more details.

SKETCH #15 Revised 12/15/14

ADAMS ELECTRIC COOPERATIVE, INC.

SECONDARY PEDESTAL REQUIREMENTS

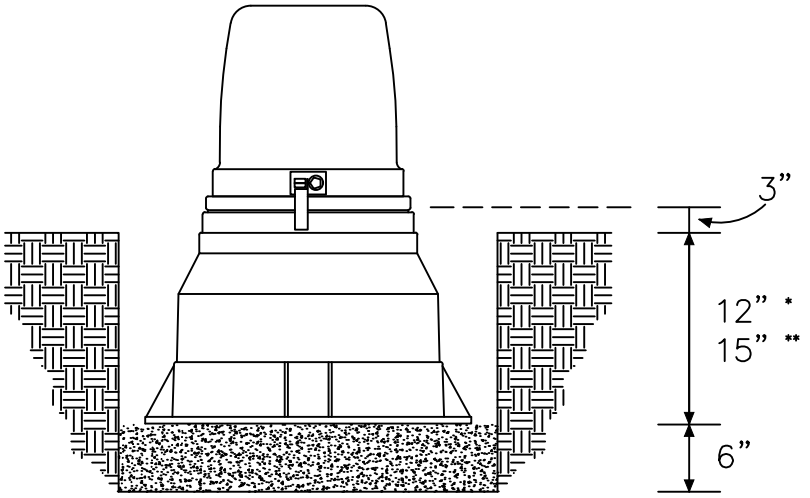

SMALL PEDESTAL *

Dig 36"x36"x18" deep and install 6" stone dust base

LARGE PEDESTAL **

Dig 72"x84"x21" deep and install 6" stone dust base

Secondary pedestal furnished and installed by AEC

Stone dust base furnished and installed by member

TRENCH DETAIL

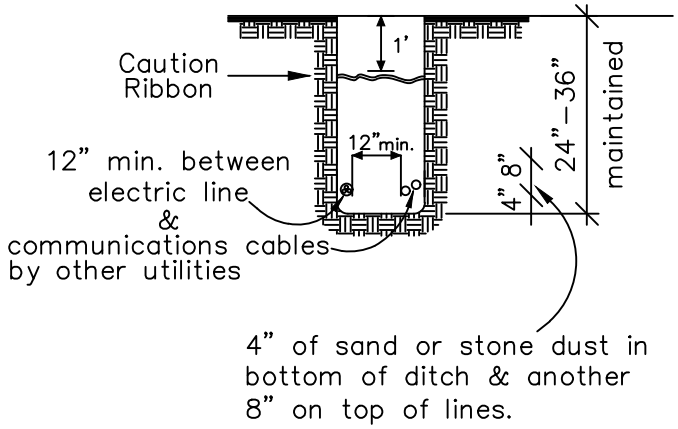

NOTES:

1. Install caution ribbon in trench at 1 ft below final grade. Member shall perform all trenching and backfilling.
2. Trenches to be jointly occupied by Electric, Telephone, and CATV cables must have a minimum width of 18". A MINIMUM OF 12" SEPARATION IS REQUIRED BETWEEN ELECTRIC AND COMMUNICATIONS CABLES.
3. Trench floor must be free of rocks and debris, and lined with top soil or screenings. Backfill with same.
4. No water, sewer, storm drain, natural gas, propane or member–owned communication and electric lines shall be permitted in the electrical service trench other than perpendicular crossings.

SKETCH #16 Revised 06/15/20

ADAMS ELECTRIC COOPERATIVE, INC.

MULTIPLE CONDUIT RISER STUB-UP REQUIREMENTS

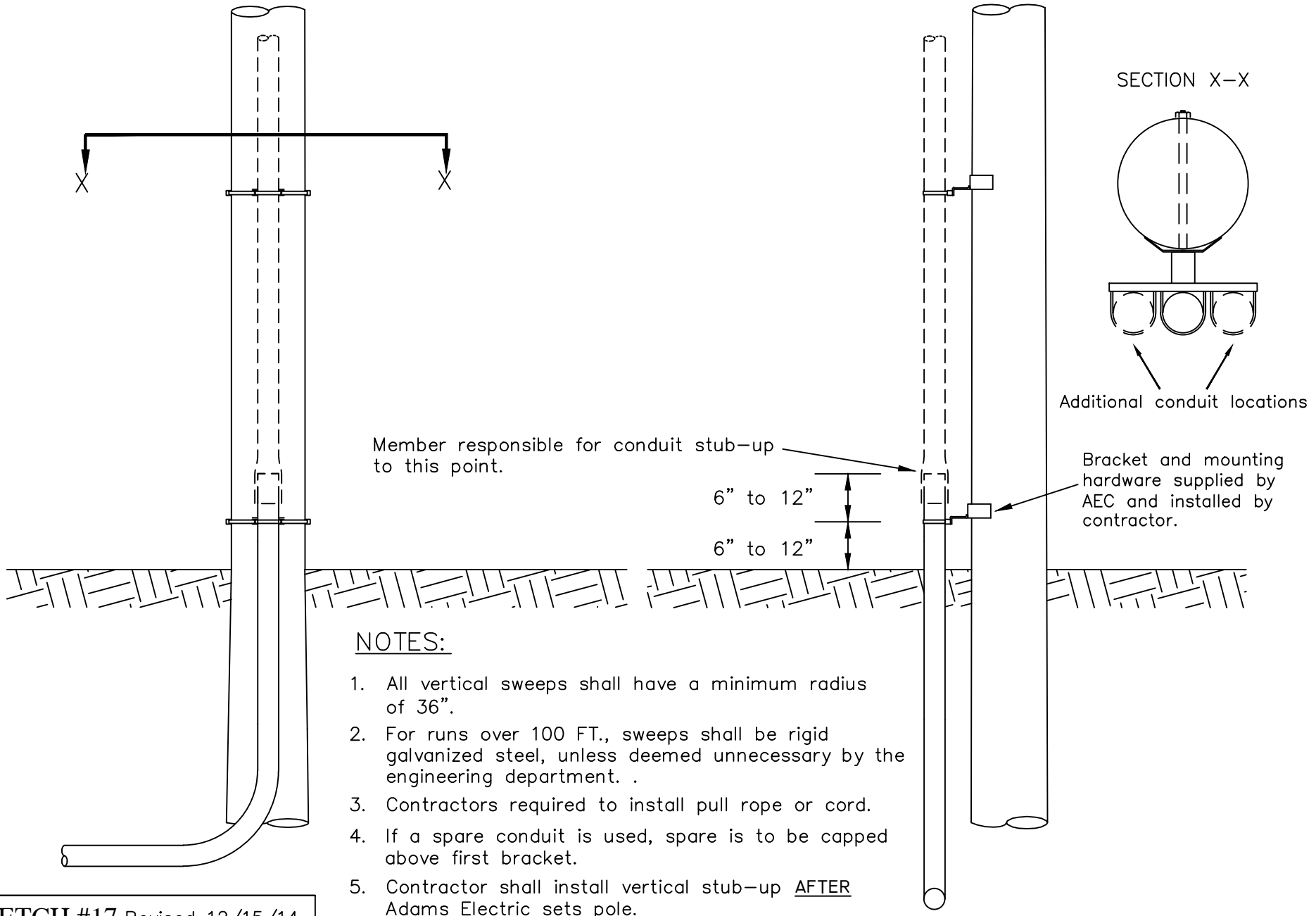

NOTES:

1. All vertical sweeps shall have a minimum radius of 36".
2. For runs over 100 FT., sweeps shall be rigid galvanized steel, unless deemed unnecessary by the engineering department. .
3. Contractors required to install pull rope or cord.
4. If a spare conduit is used, spare is to be capped above first bracket.
5. Contractor shall install vertical stub–up AFTER Adams Electric sets pole.

SKETCH #17 Revised 12/15/14

ADAMS ELECTRIC COOPERATIVE, INC.

TRANSFORMER AND COMMUNICATION PEDESTAL CONFIGURATION

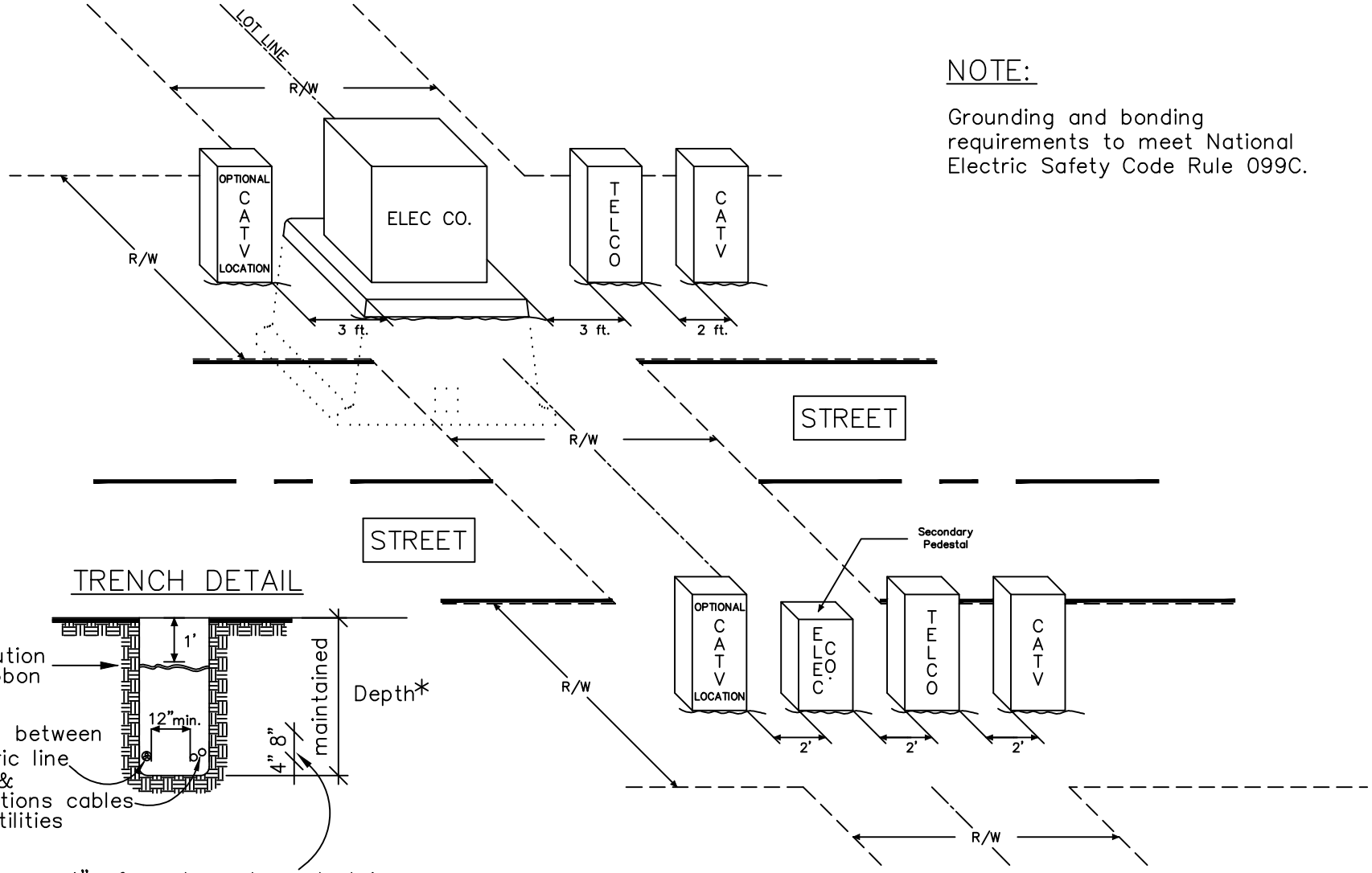

NOTE:

Grounding and bonding requirements to meet National Electric Safety Code Rule 099C.

TRENCH DETAIL

4" of sand or stone dust in bottom of ditch & another 8" on top of lines.

* 24" – 30" for secondary underground and
38" – 40" for primary underground

SKETCH #18 Revised 10/02/12

ADAMS ELECTRIC COOPERATIVE, INC.

STANDARD CLEARANCES FOR NATURAL GAS OR PROPANE

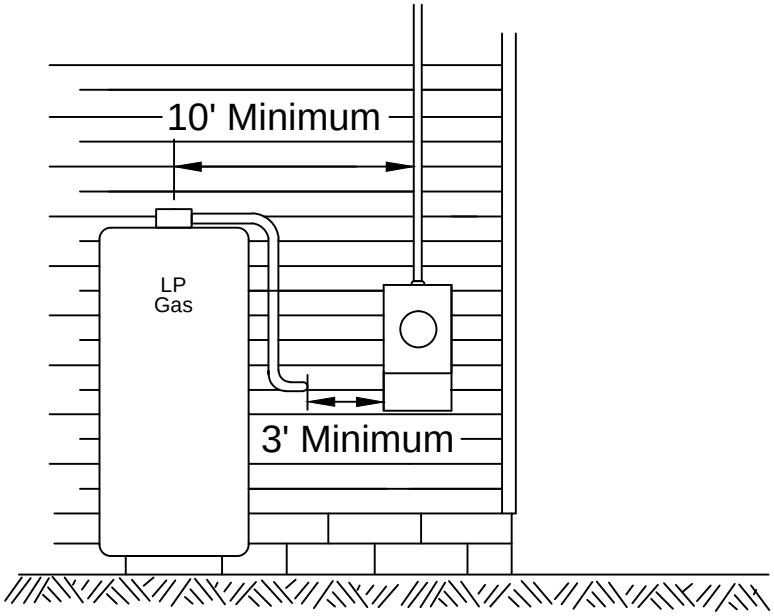

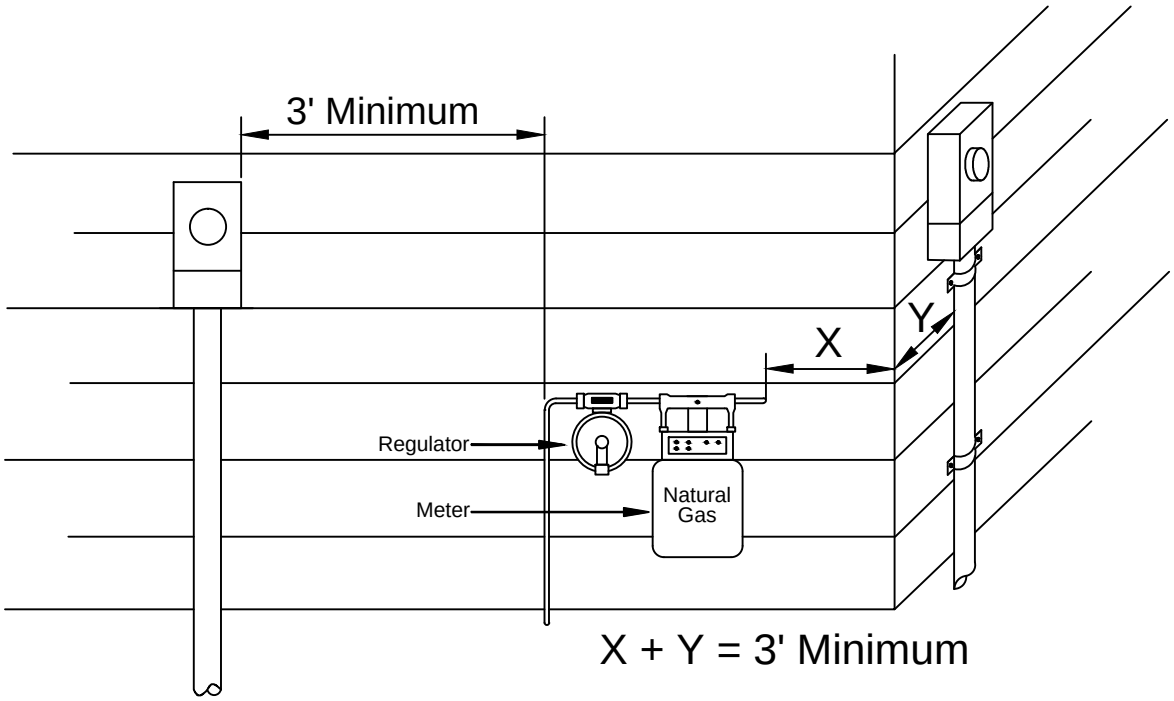

SKETCH #19 Revised 10/02/12

ADAMS ELECTRIC COOPERATIVE, INC.

PROTECTIVE BOLLARD INSTALLATION

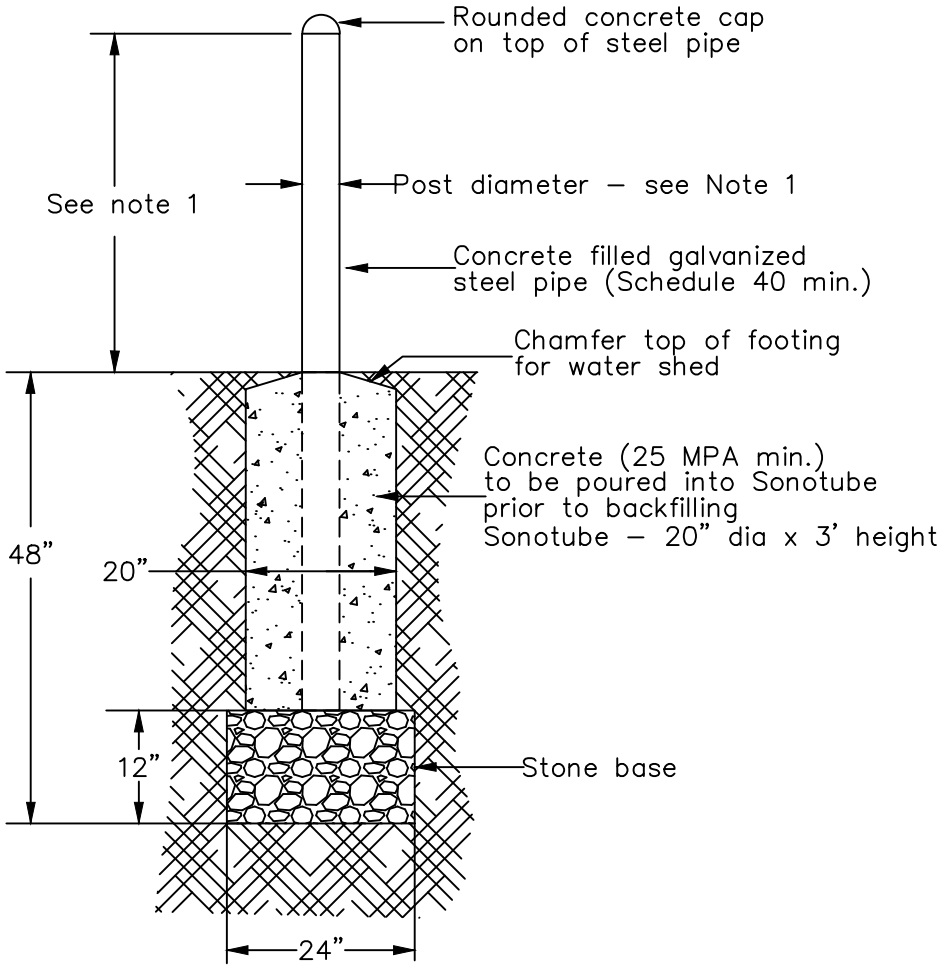

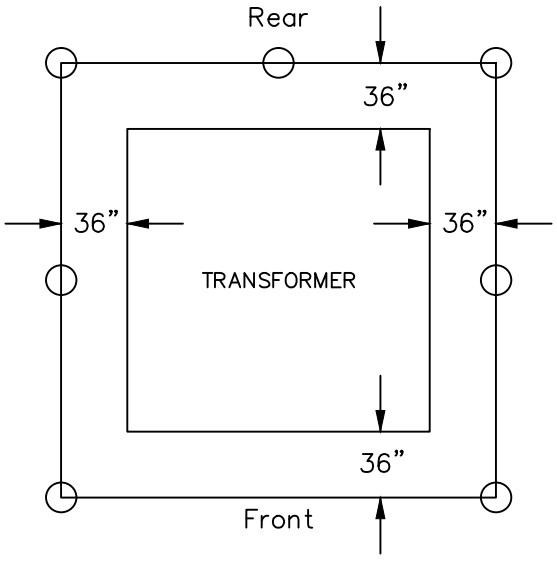

NOTES

1. Protective bollard dimensions:
   - Single phase: Height 3'; Diameter 4"
   - Three phase: Height 4'; Diameter 6"
2. Seven bollards required unless otherwise stated in design

SKETCH #20 Revised 11/25/14

ADAMS ELECTRIC COOPERATIVE, INC.

PRIMARY METERED SERVICE

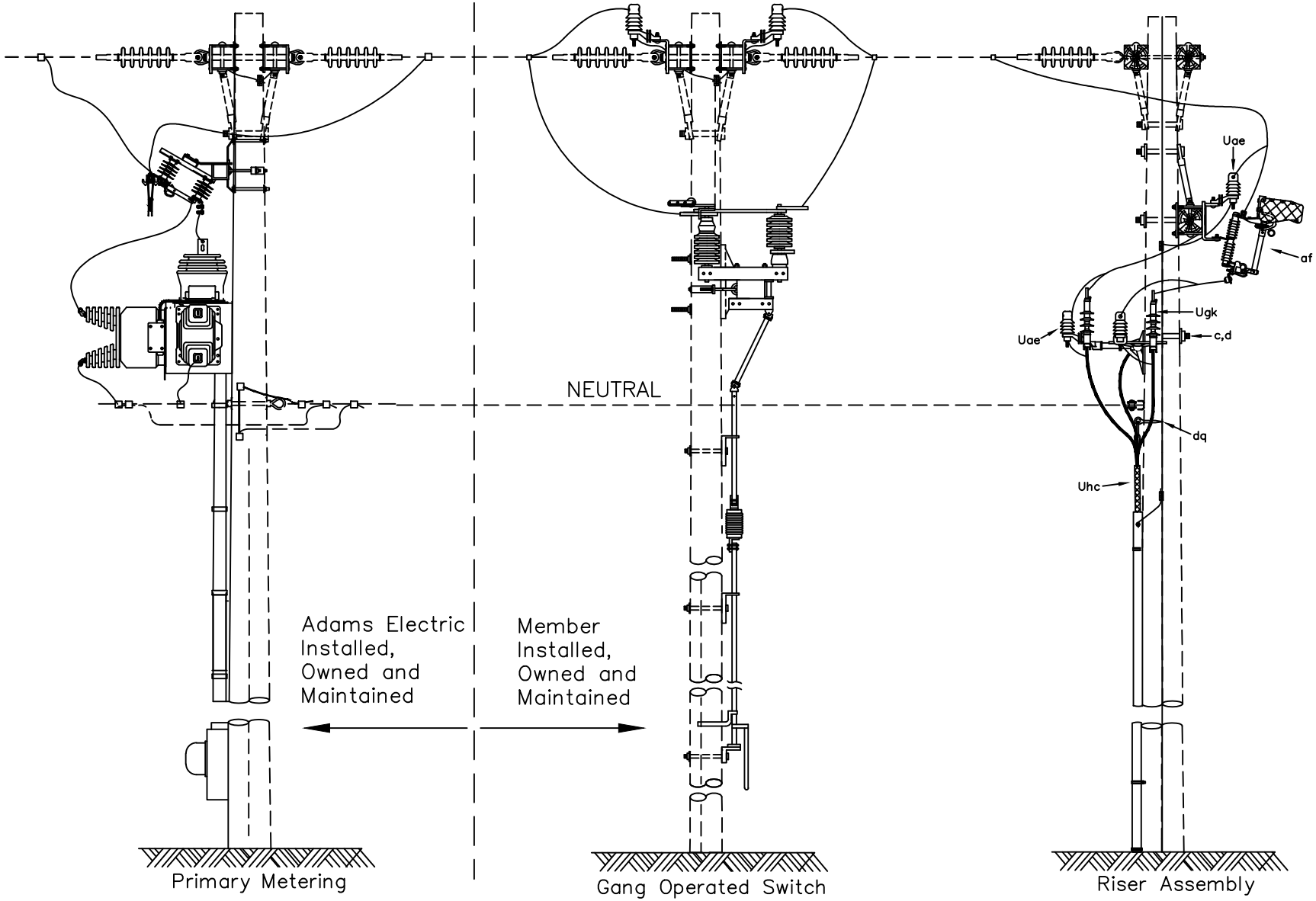

SKETCH #21 Revised 10/26/20

LOAD DATA SHEET

NAME _____

ADDRESS _____

VOLTAGE REQUESTED	
☐	120/240 1 phase
☐	277/480 3 phase
☐	120/208 3 phase
☐	120/240 3 phase
☐	Service Size Requested (amps)

TYPE OF SERVICE REQUESTED	
☐	Standard Overhead Service
☐	Underground Lateral
☐	Underground Primary & Secondary
☐	Other _____
	Date Required _____

LOAD INFORMATION

	EXISTING	NEW	LIST MOTORS AND USE
Lighting			
Heat Pump			
Resistance Heat			
Water Heater			
Air Conditioning			
Motor Load			
Welders, Hot tub, etc			
Other Significant			

Prepared by _____ Date _____

Remarks _____

_____

_____

Member's Service Wires:

Length of Service _____ Number: _____

Size: _____